US 20120291873A1

(19) United States

(12) Patent Application Publication

(10) Pub. No.: US 2012/0291873 A1

(43) Pub. Date: Nov. 22, 2012

Potter et al.

(54) HYDRAULIC CIRCUIT

(76) Inventors: **Steven Potter**, Bedford, MA (US); **Chris Richburg**, Somerville, MA (US)

(21) Appl. No.: **13/068,717**

(22) Filed: **May 18, 2011**

Publication Classification

(51) **Int. Cl.**
F16K 7/00 (2006.01)

(52) **U.S. Cl.** **137/12**; 137/861

(57) **ABSTRACT**

A hydraulic circuit and method includes a valve subsystem between a high pressure source, a medium pressure source, a low pressure return, and an actuator. The valve subsystem is configured and controllable to drive the actuator using the high pressure hydraulic fluid or the medium pressure hydraulic fluid and also to direct low pressure hydraulic fluid exiting the actuator to the low pressure return. A controller is responsive to high pressure criteria and medium pressure criteria associated with the actuator and is configured to operate the valve subsystem to present high pressure hydraulic fluid to the actuator in response to high pressure criteria and to present medium pressure hydraulic fluid to the actuator in response to medium pressure criteria.

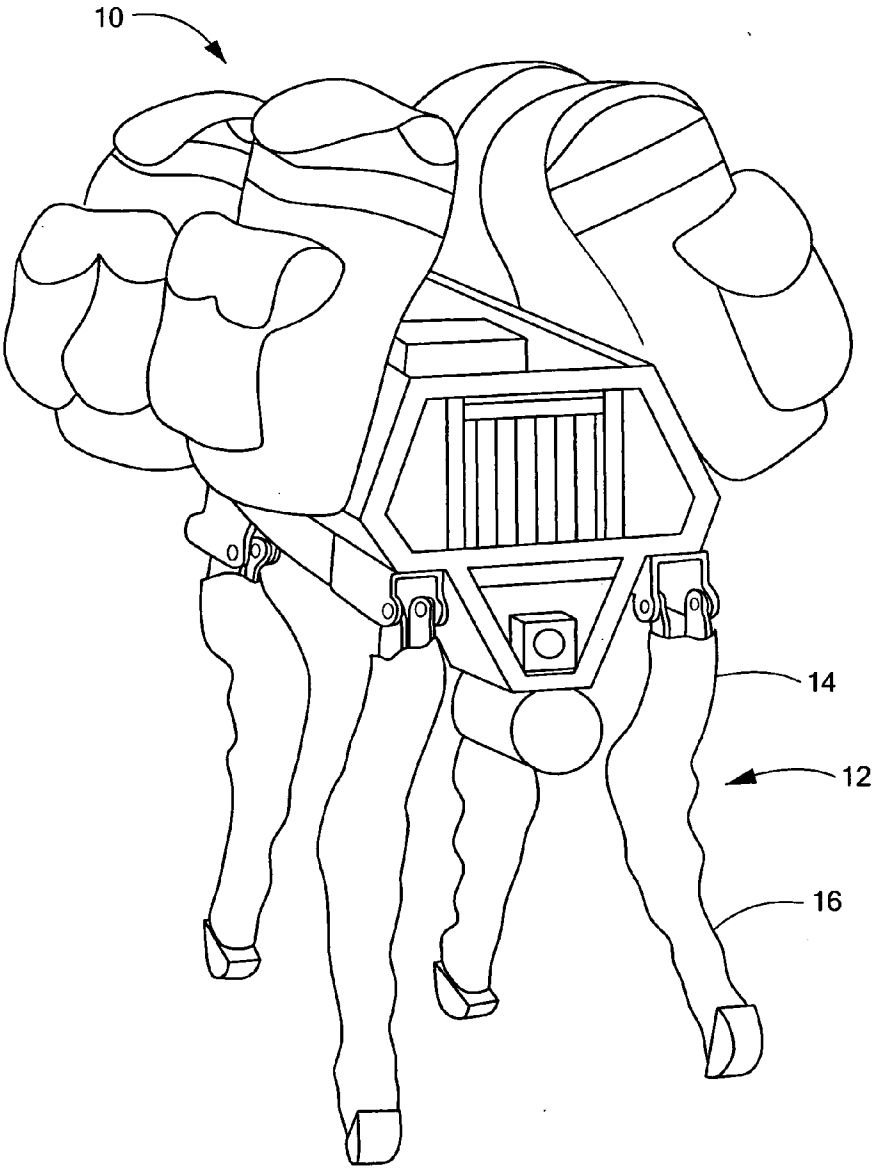

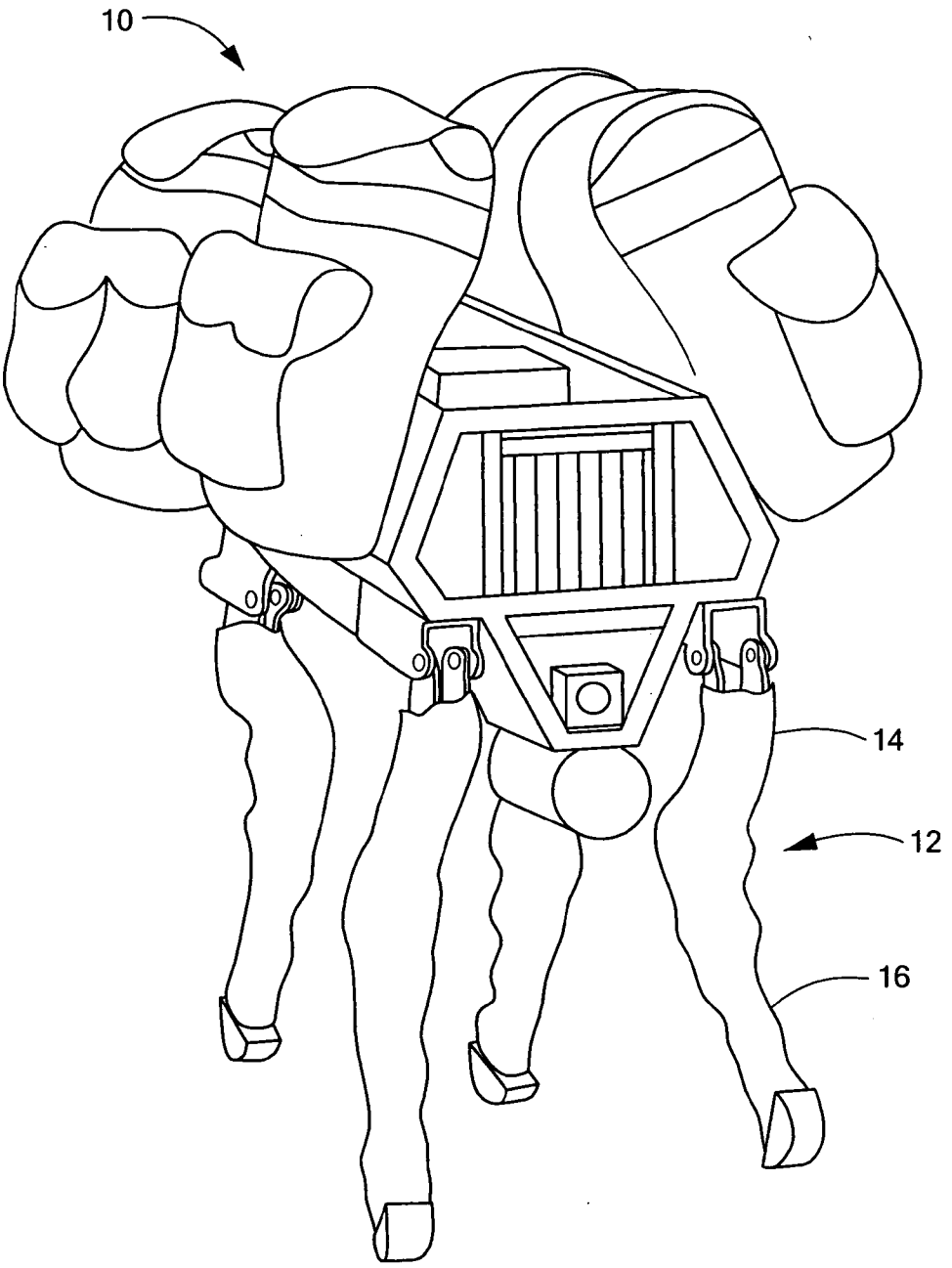

FIG. 1

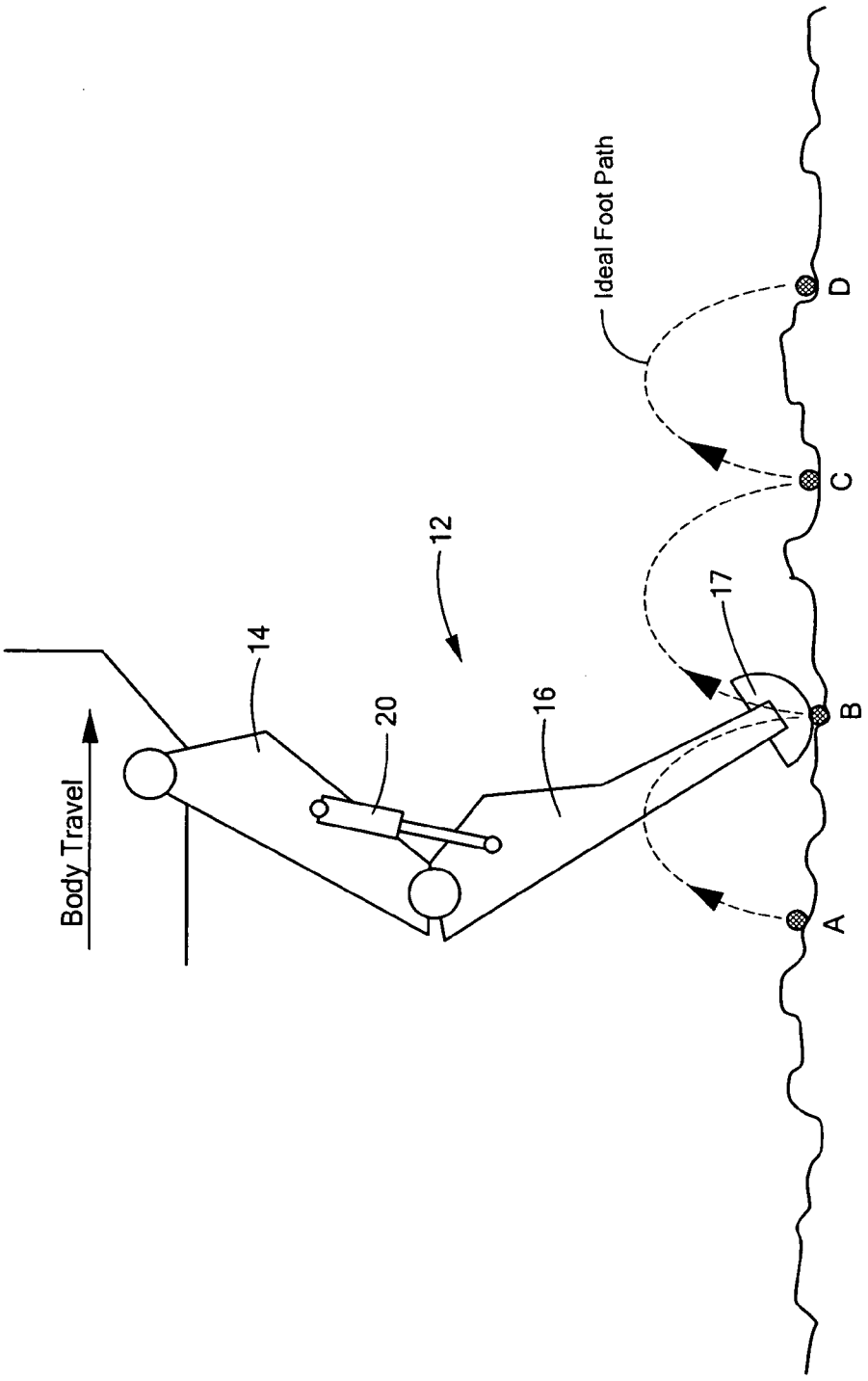

FIG. 2

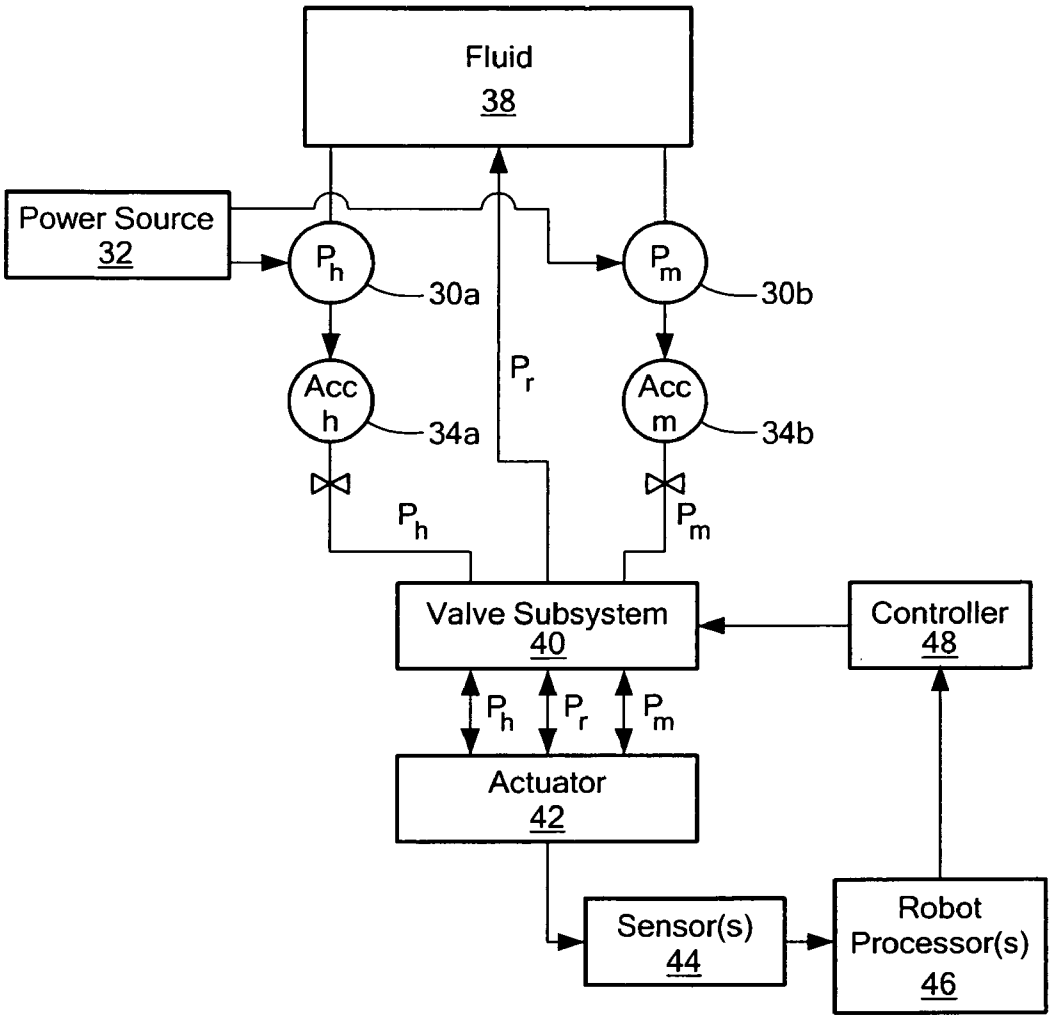
Fluid
38
Power Source
32
P_h
30a
P_m
30b
Acc
h
34a
P_r
Acc
m
34b
P_h
P_m
Valve Subsystem
40
Controller
48
P_h
P_r
P_m
Actuator
42
Sensor(s)
44
Robot
Processor(s)
46

FIG. 3

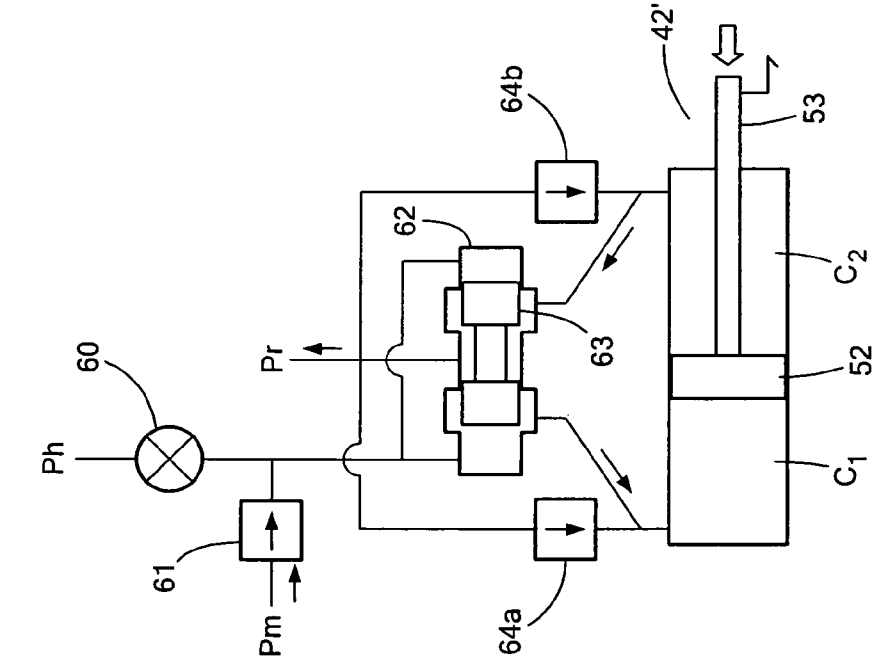
42'
64b
53
62
63
Pr
60
Ph
52
C_2
C_1
61
Pm
64a

FIG. 5A

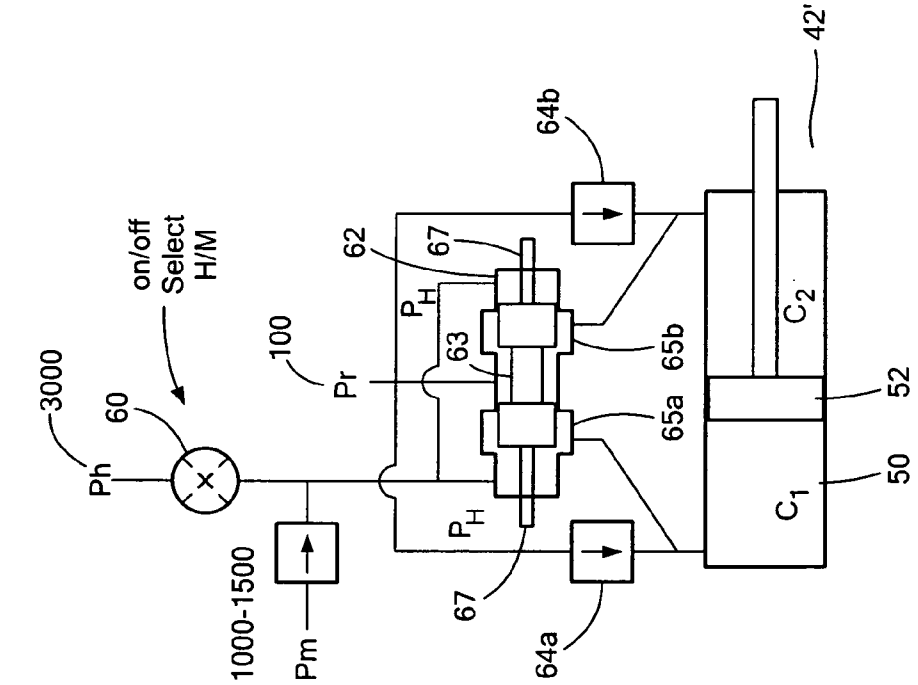
42'
64b
on/off
Select
H/M
62
67
P_H
100
Pr
63
65b
65a
3000
60
Ph
52
C_2
C_1
50
1000-1500
Pm
67
P_H
64a

FIG. 4

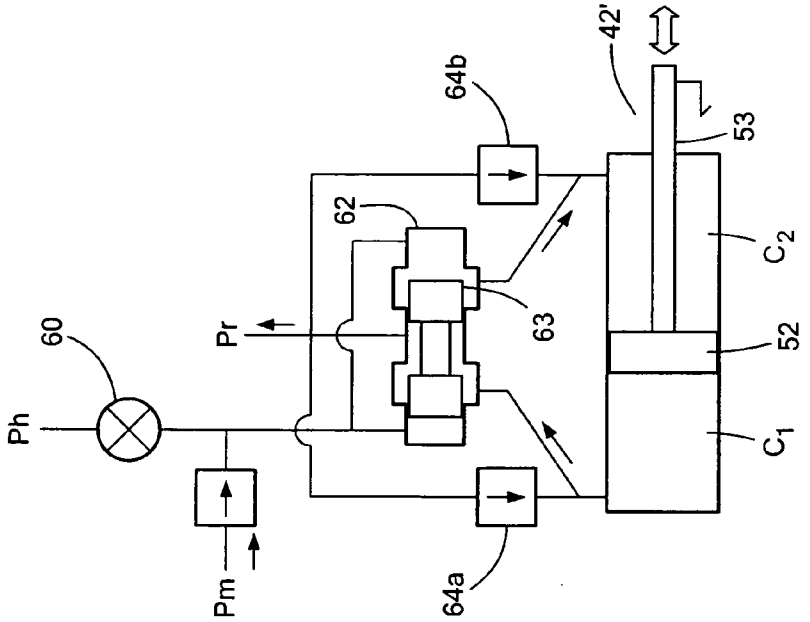
42'
64b
53
62
C_2
63
60
Pr
52
Ph
C_1
Pm
64a

FIG. 5C

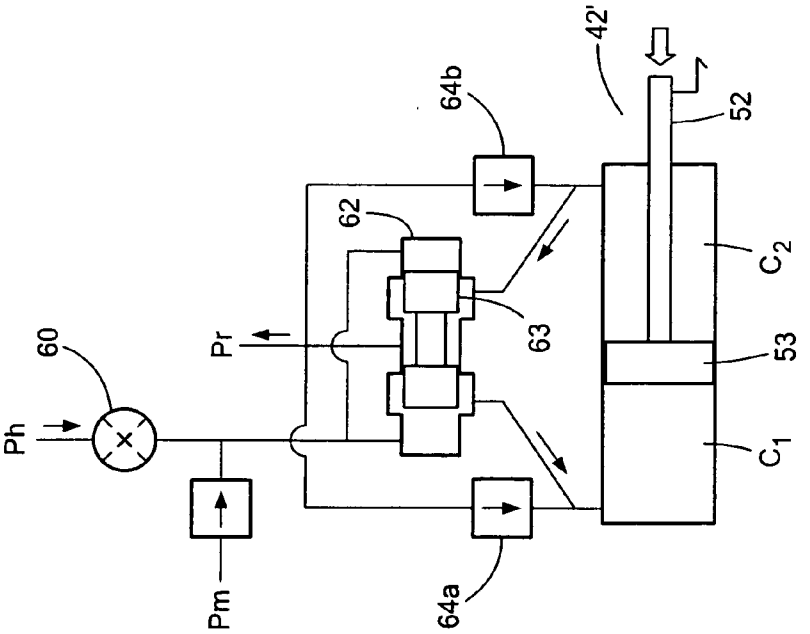
42'
64b
52
62
C_2
63
60
Pr
53
Ph
C_1
Pm
64a

FIG. 5B

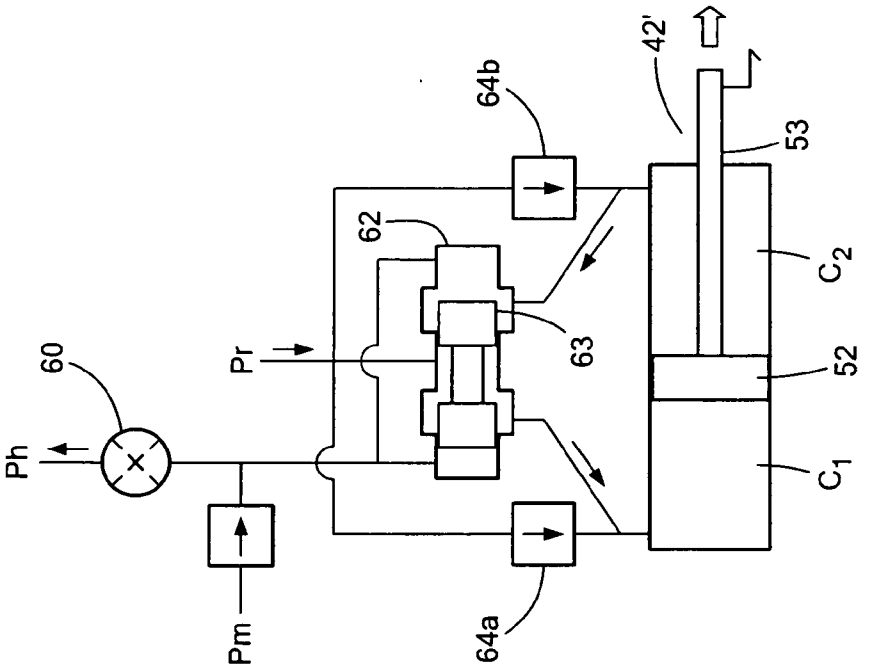
42'
64b
53
62
C_2
63
Pr
60
52
Ph
C_1
Pm
64a

FIG. 5E

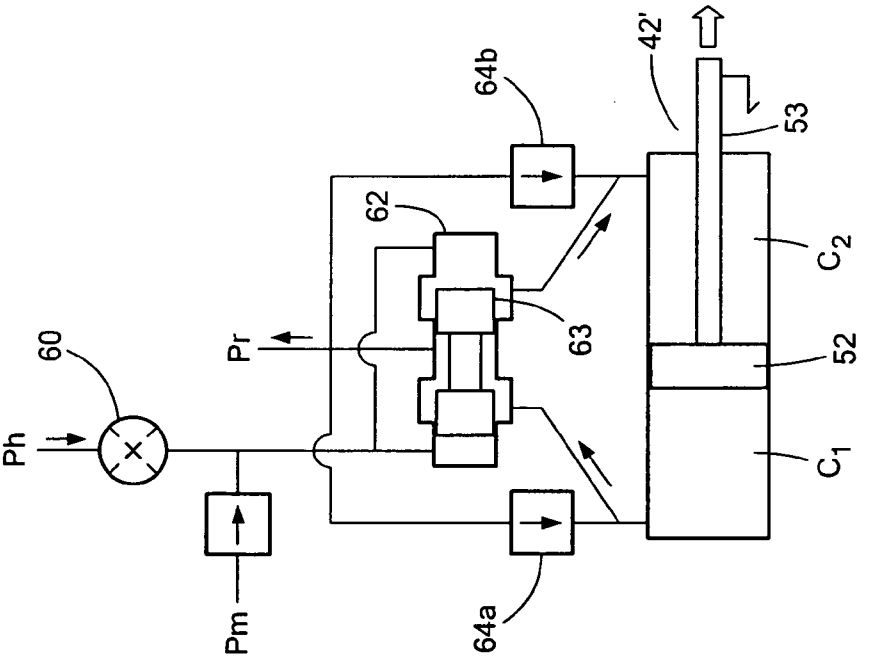
42'
64b
53
62
C_2
63
Pr
60
52
Ph
C_1
Pm
64a

FIG. 5D

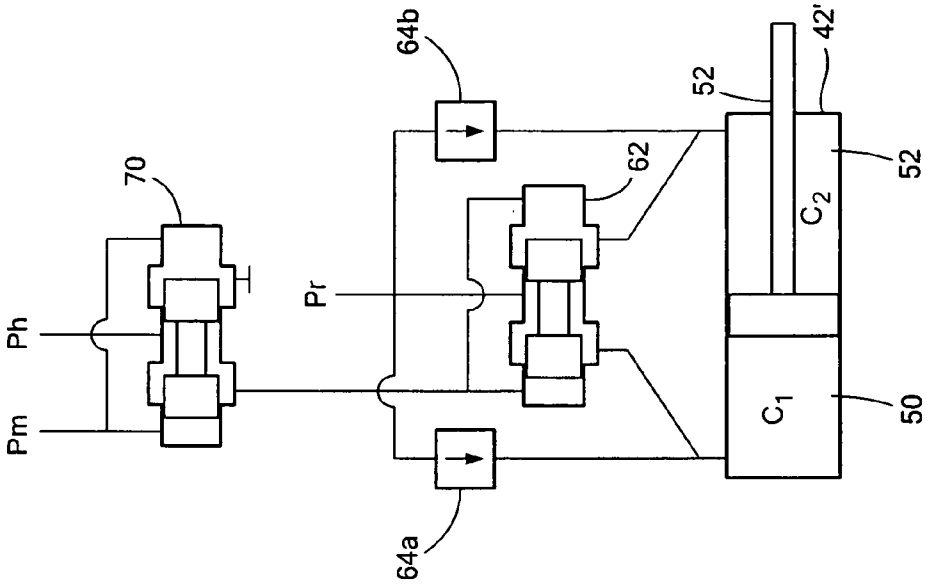
64b
42'
52
70
62
52
Ph
Pr
C_2
Pm
C_1
50
64a

FIG. 6

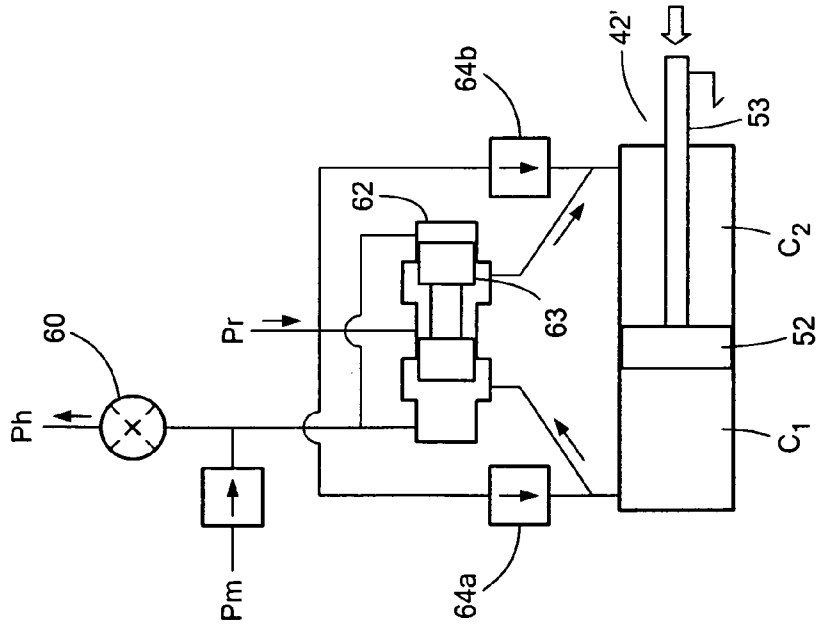
42'
64b
53
62
C_2
63
60
Pr
52
Ph
C_1
Pm
64a

FIG. 5F

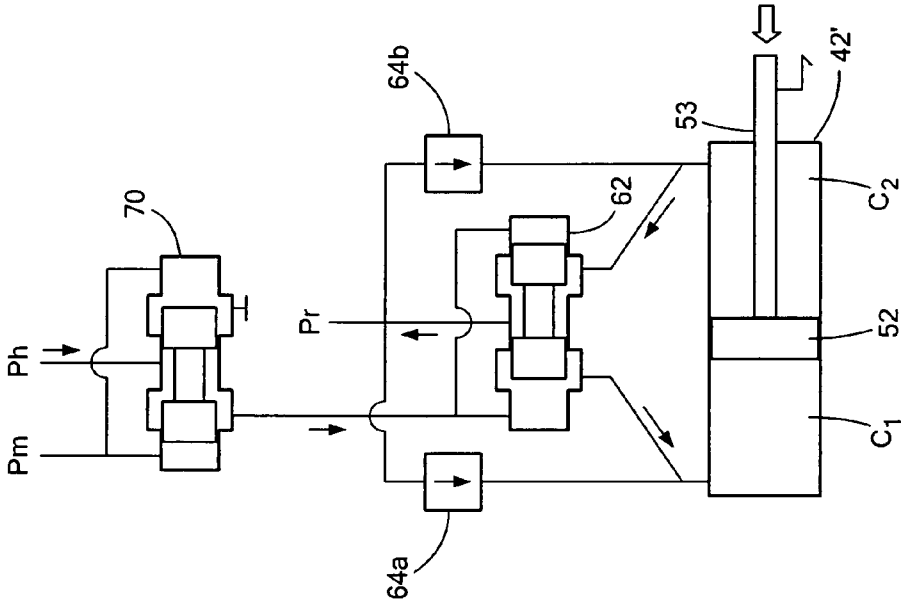
64b
42'
53
70
62
Ph
Pr
52
Pm
C_2
C_1
64a

FIG. 7B

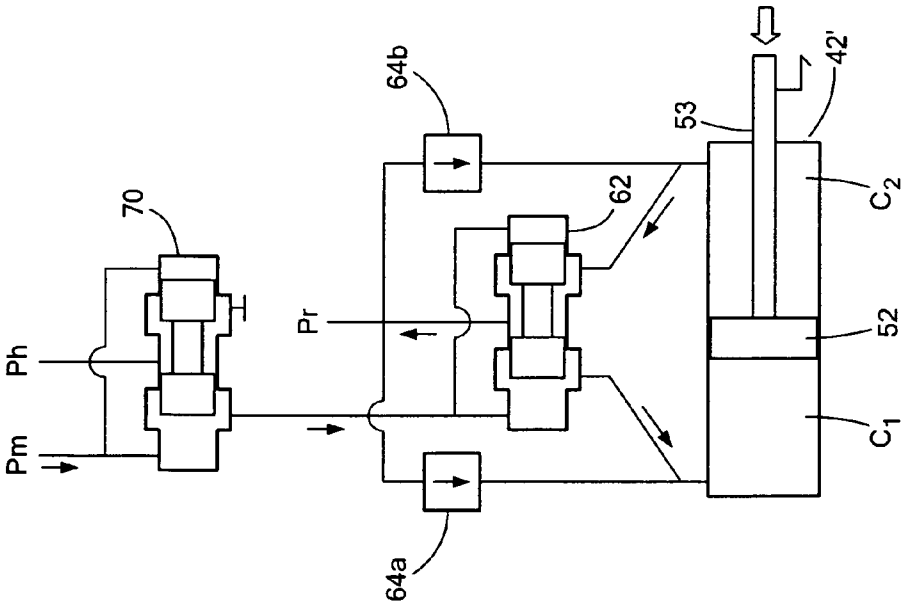
64b
42'
53
70
62
Ph
Pr
52
Pm
C_2
C_1
64a

FIG. 7A

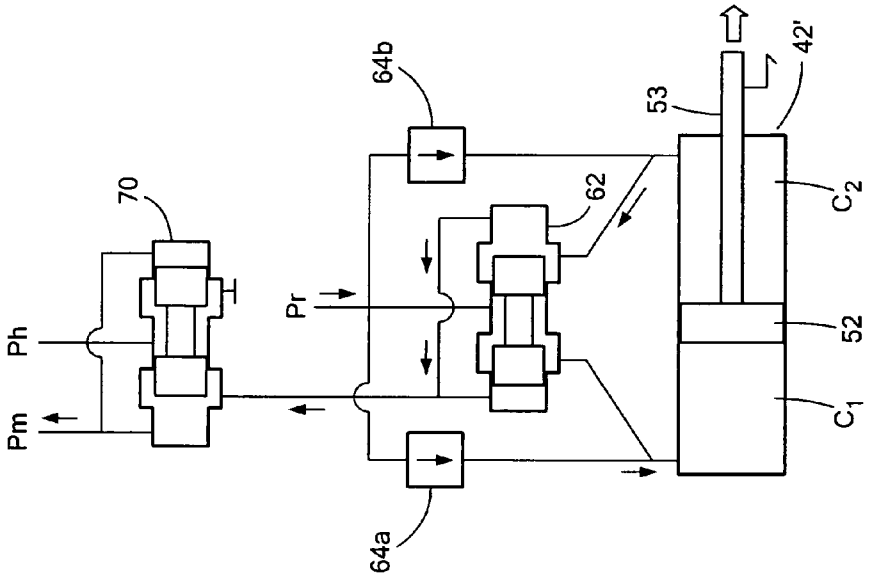
64b
53
42'
70
62
Pr
Ph
Pm
52
C_2
C_1
64a

FIG. 7D

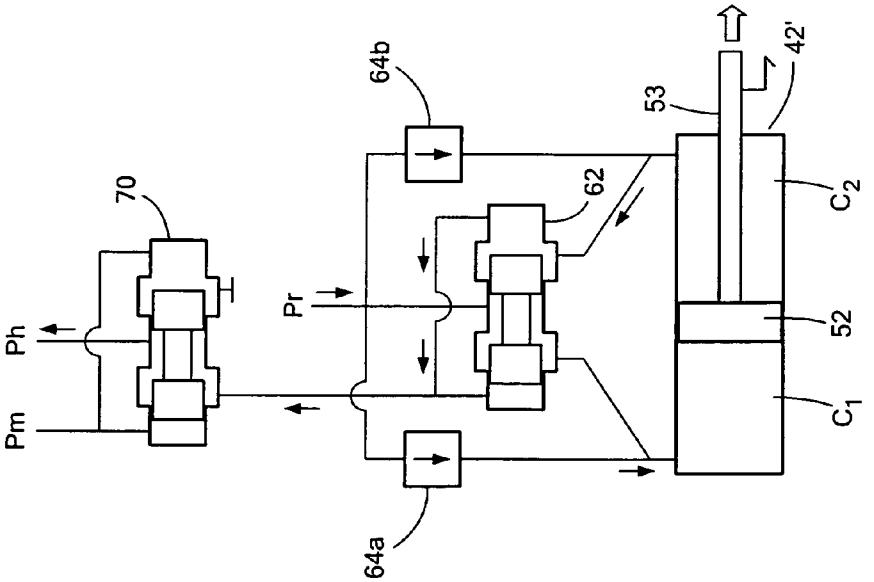
64b
53
42'
70
62
Pr
Ph
Pm
52
C_2
C_1
64a

FIG. 7C

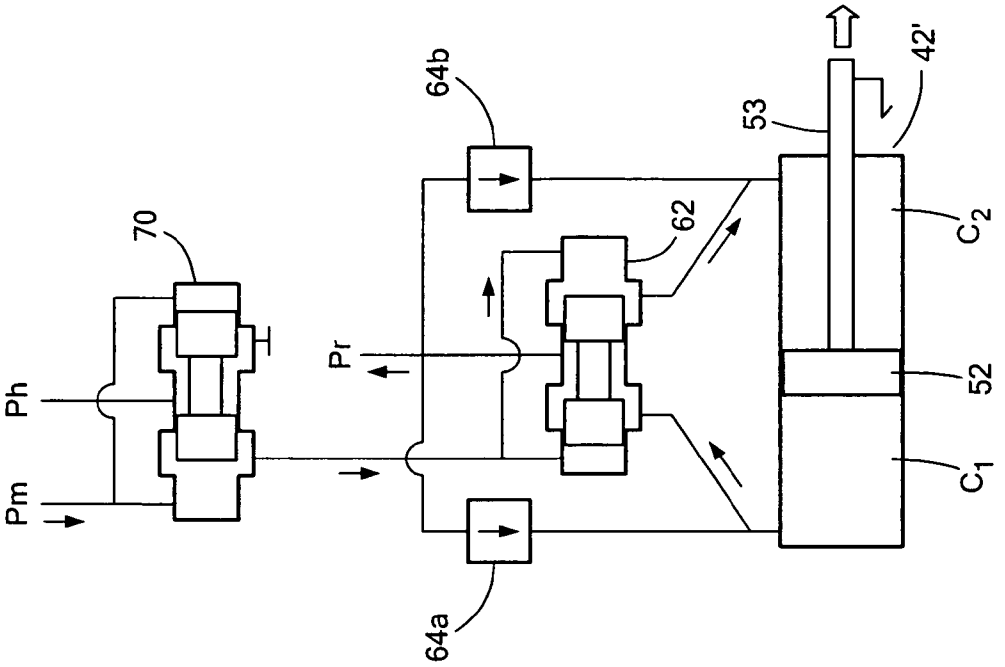
64b
53
42'
70
62
C_2
Pr
Ph
52
Pm
C_1
64a

FIG. 7F

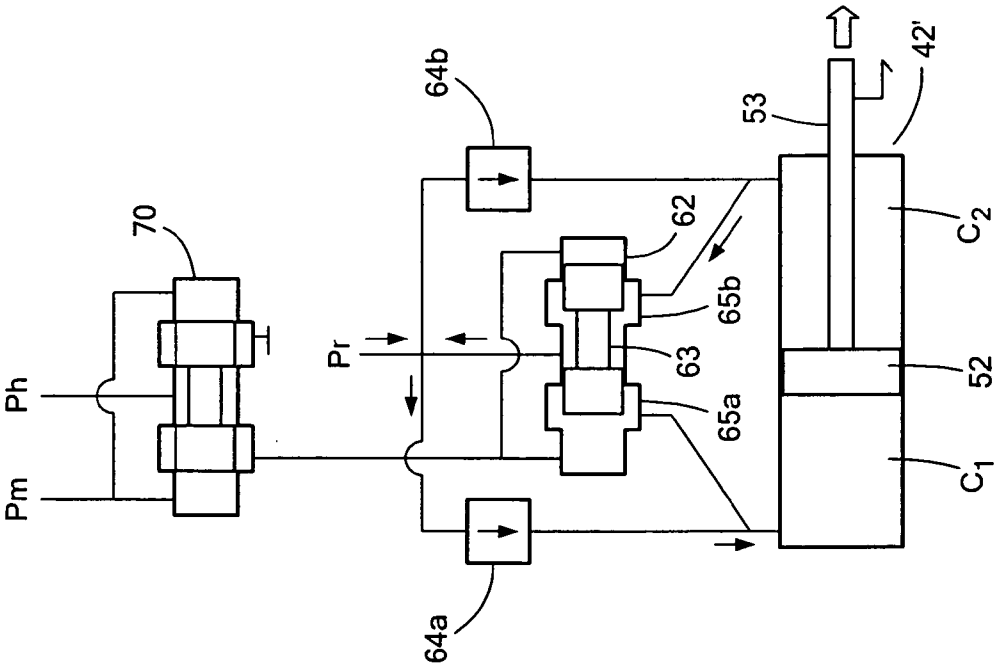
64b
53
42'
70
62
C_2
65b
Pr
63
Ph
52
65a
Pm
C_1
64a

FIG. 7E

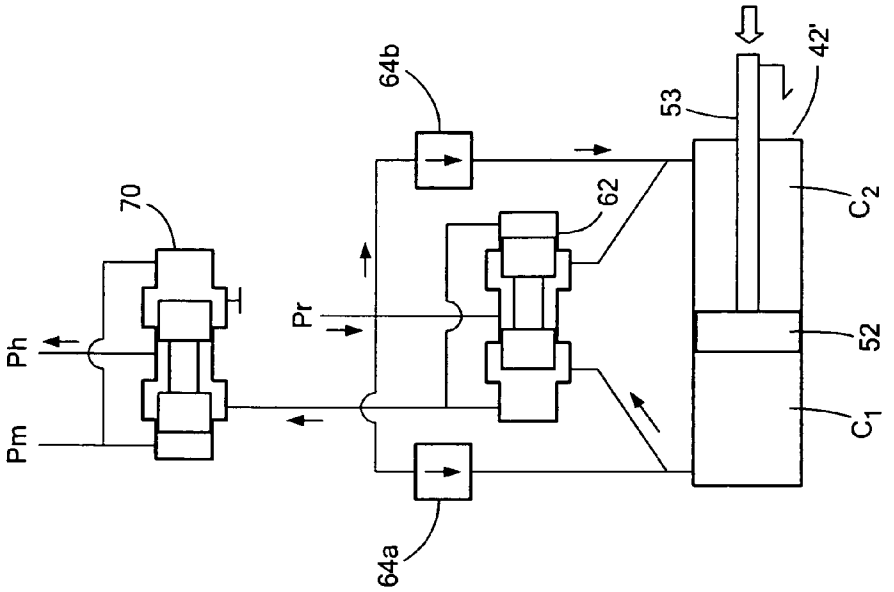
64b
42'
53
70
62
Pr
Ph
Pm
C_2
52
C_1
64a

FIG. 7H

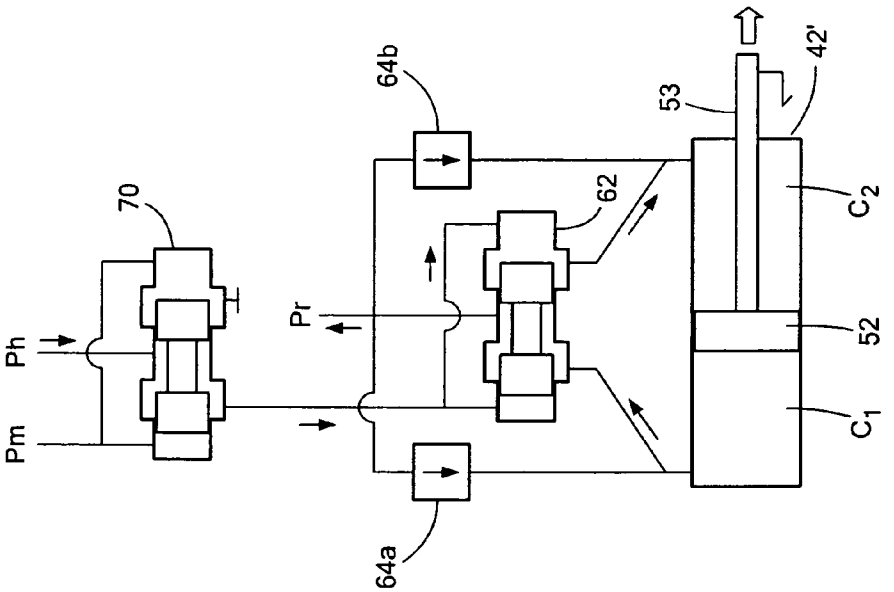
64b
42'
53
70
62
Pr
Ph
Pm
C_2
52
C_1
64a

FIG. 7G

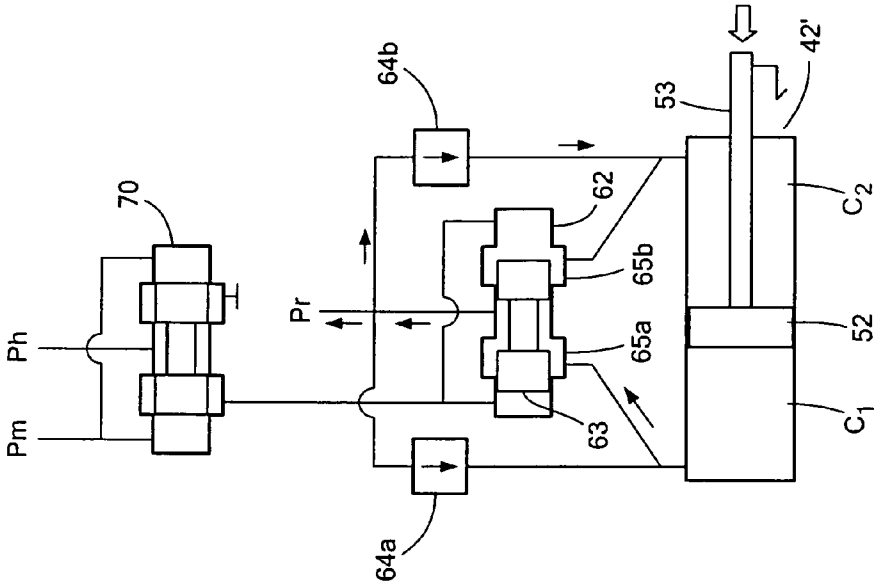
64b
53
42'
70
62
C_2
Pr
65b
Ph
65a
52
Pm
63
C_1
64a

FIG. 7J

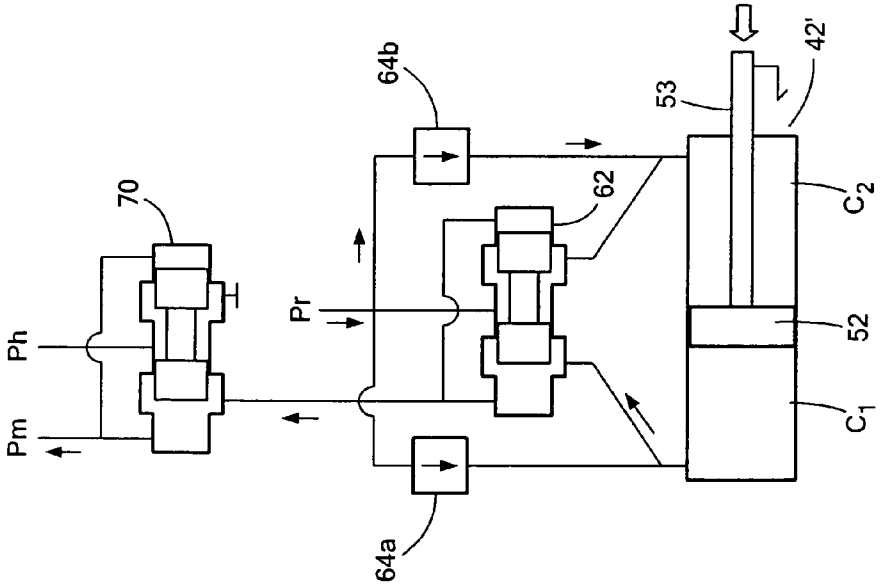
64b
53
42'
70
62
C_2
Pr
Ph
52
Pm
C_1
64a

FIG. 7I

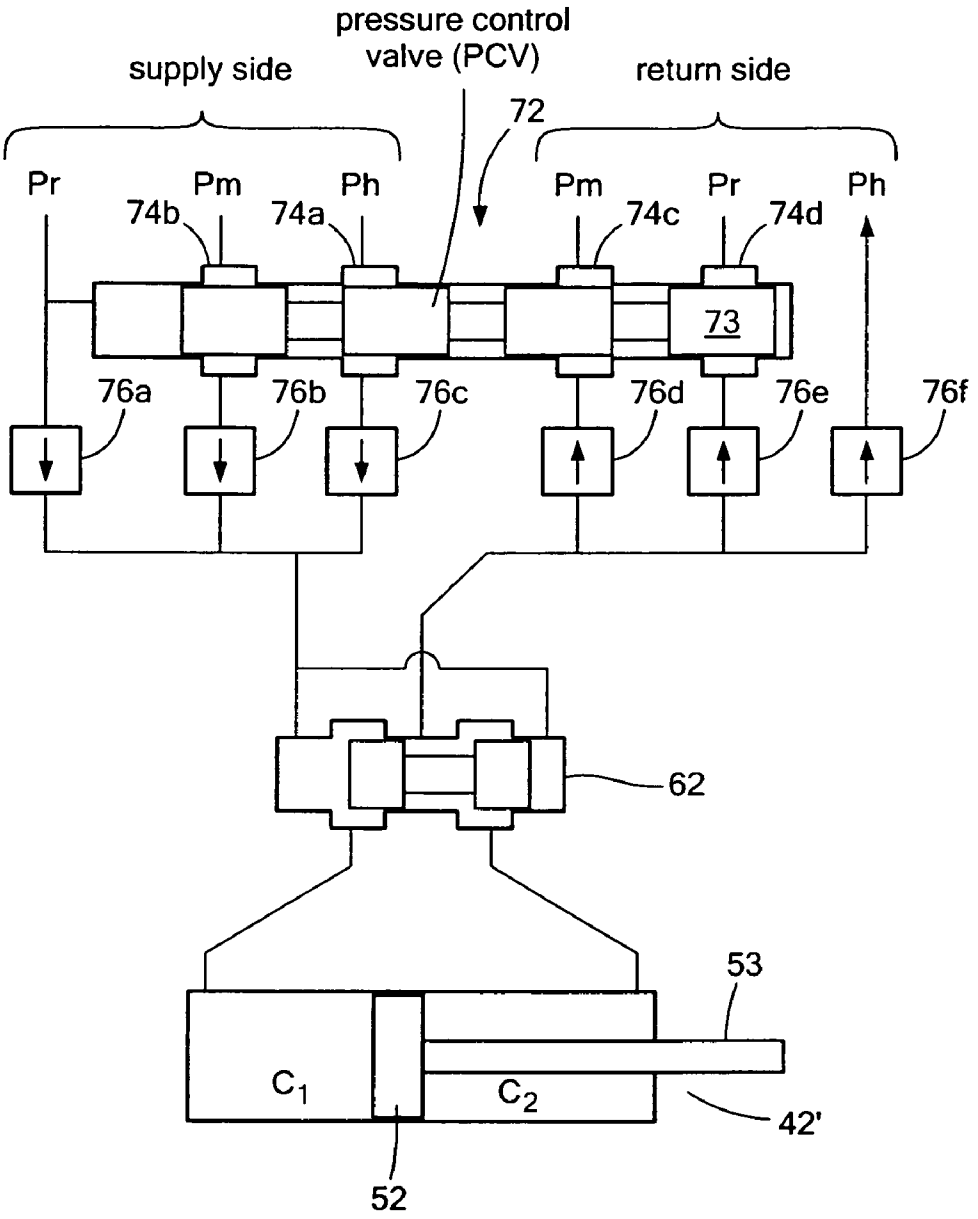
pressure control valve (PCV)
supply side
return side
72
Pr
Pm
Ph
Pm
Pr
Ph
74b
74a
74c
74d
73
76a
76b
76c
76d
76e
76f
62
53
C1
C2
42'
52

FIG. 8

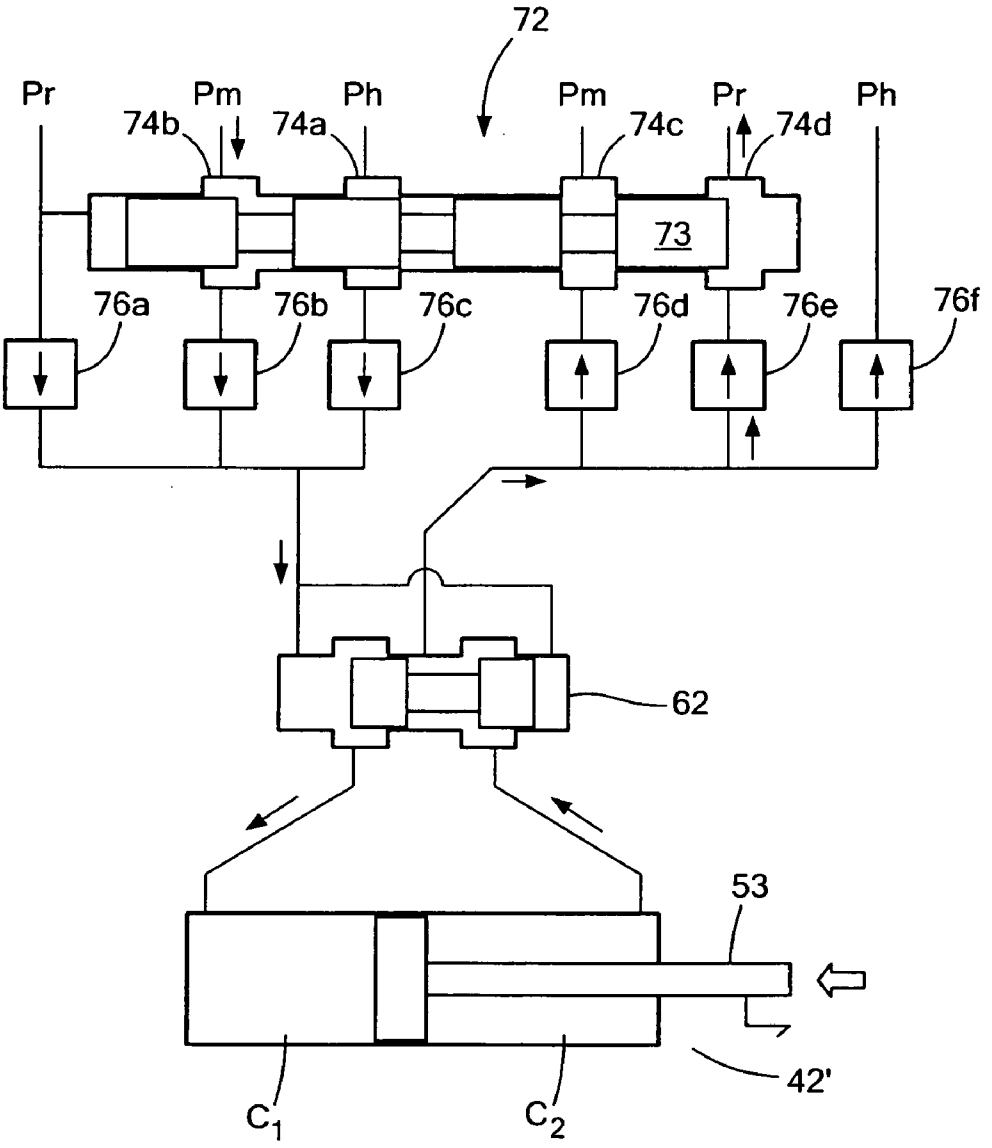
72
Pr
Pm
Ph
Pm
Pr
Ph
74b
74a
74c
74d
73
76a
76b
76c
76d
76e
76f
62
53
42'
C1
C2

FIG. 9A

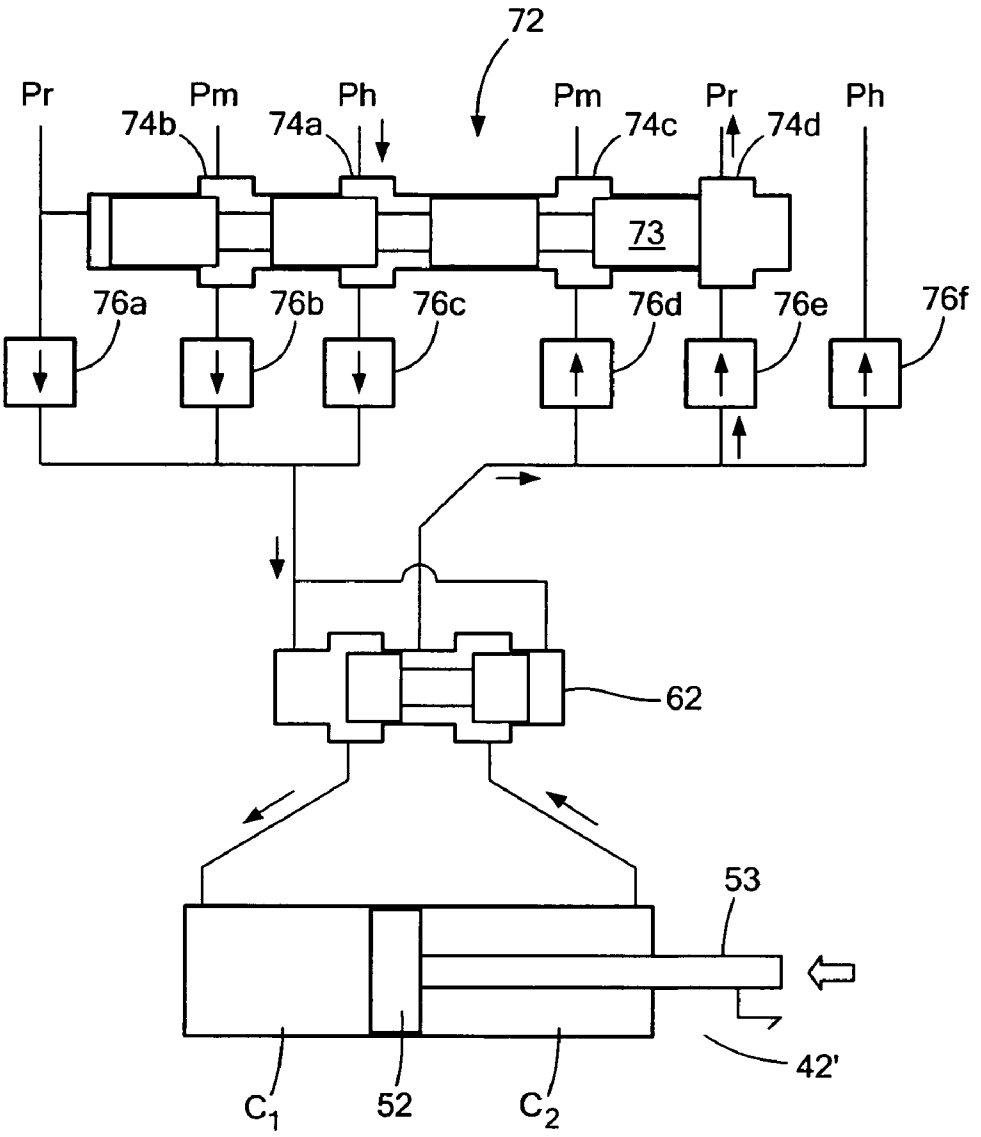
72
Pr
Pm
Ph
Pm
Pr
Ph
74b
74a
74c
74d
73
76a
76b
76c
76d
76e
76f
62
53
42'
C1
52
C2

FIG. 9B

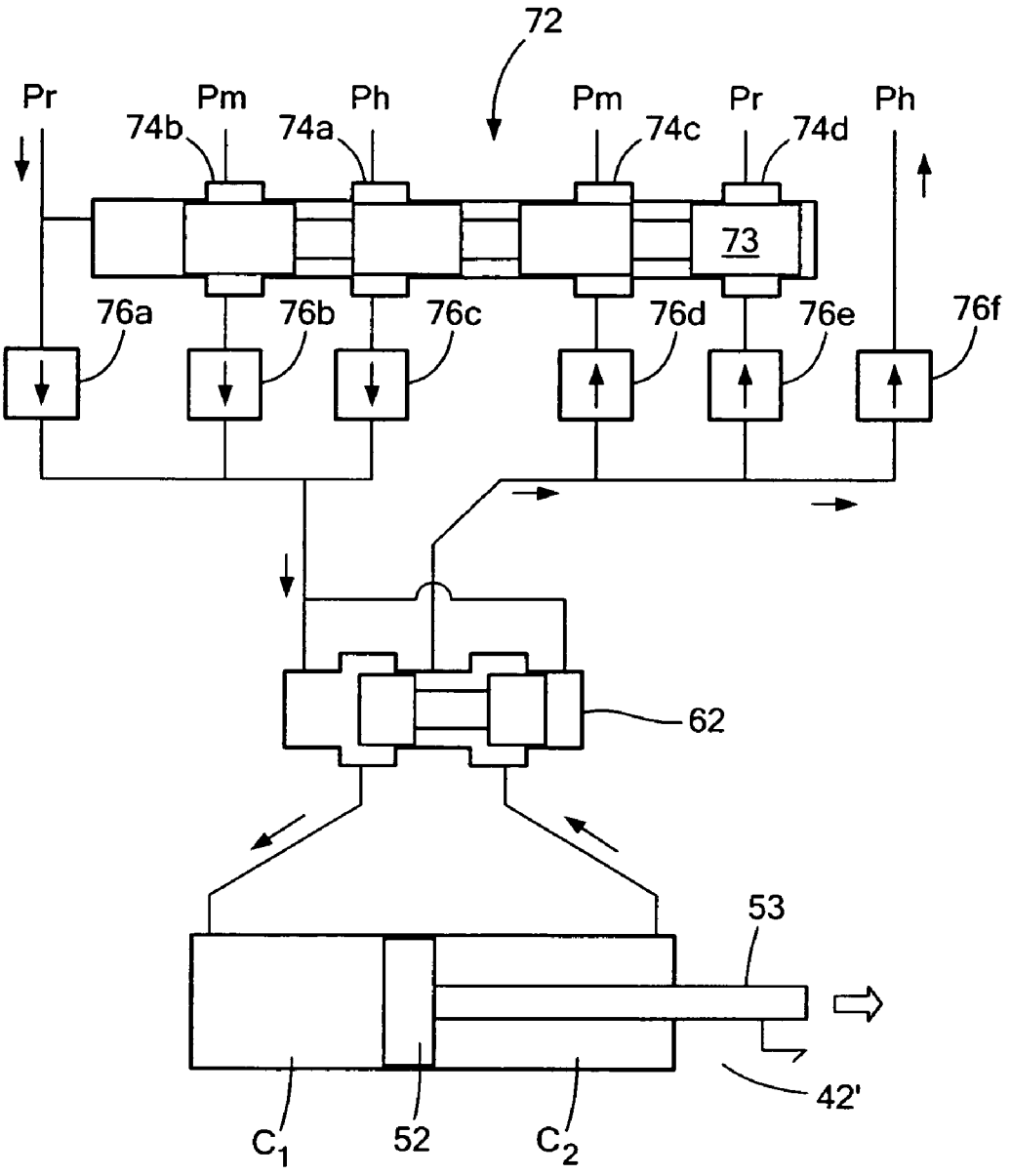
72
Pr
Pm
Ph
Pm
Pr
Ph
74b
74a
74c
74d
73
76a
76b
76c
76d
76e
76f
62
53
42'
C1
52
C2

FIG. 9C

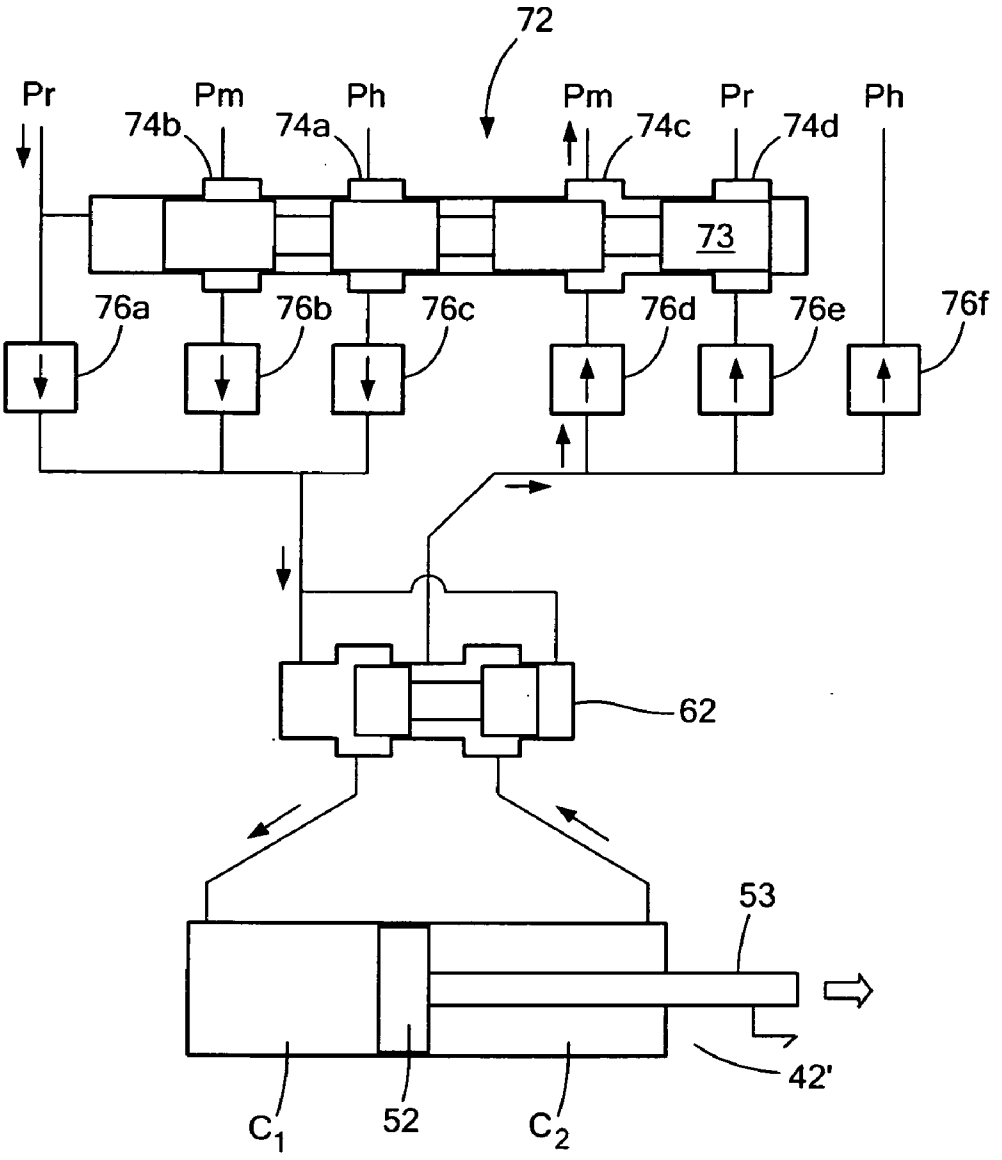
72
Pr
Pm
Ph
Pm
Pr
Ph
74b
74a
74c
74d
73
76a
76b
76c
76d
76e
76f
62
53
42'
C1
52
C2

FIG. 9D

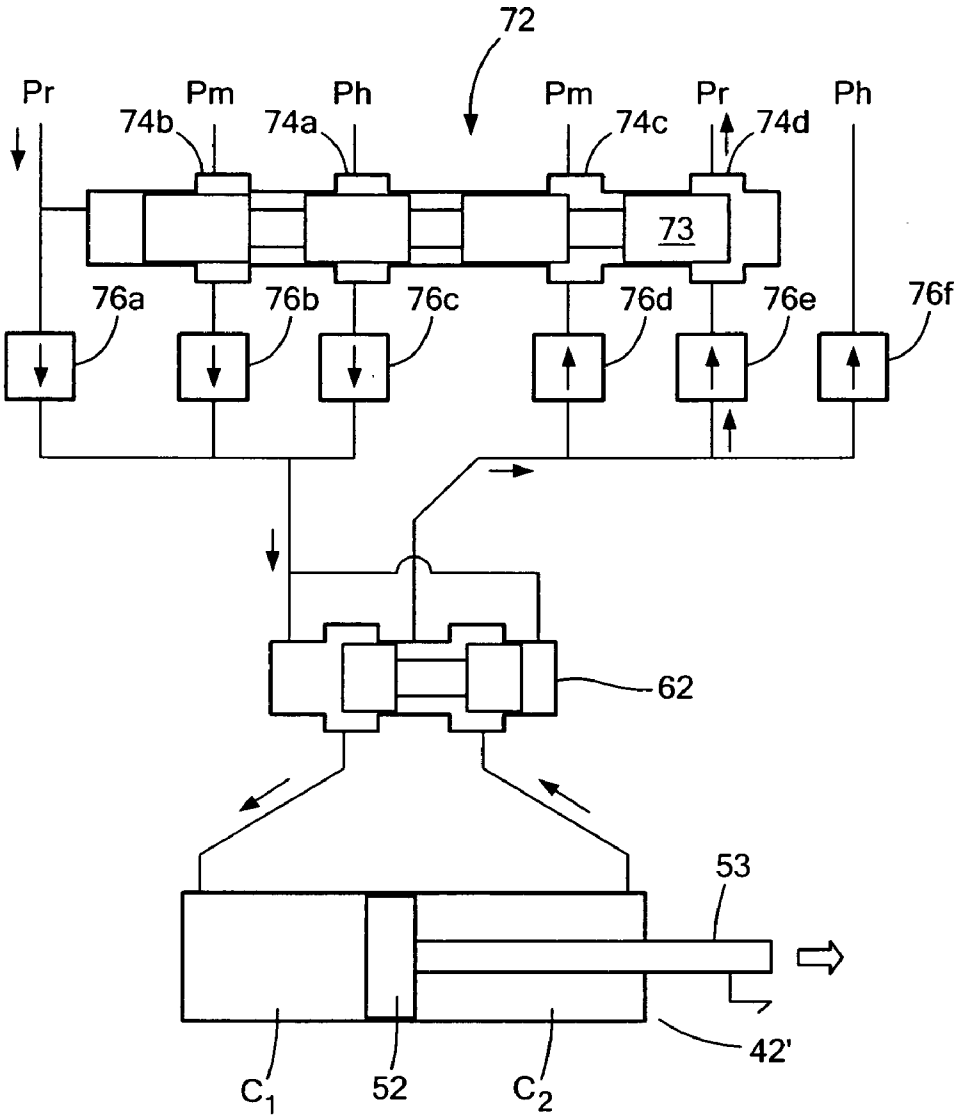
72
Pr
Pm
Ph
Pm
Pr
Ph
74b
74a
74c
74d
73
76a
76b
76c
76d
76e
76f
62
53
42'
C1
52
C2

FIG. 9E

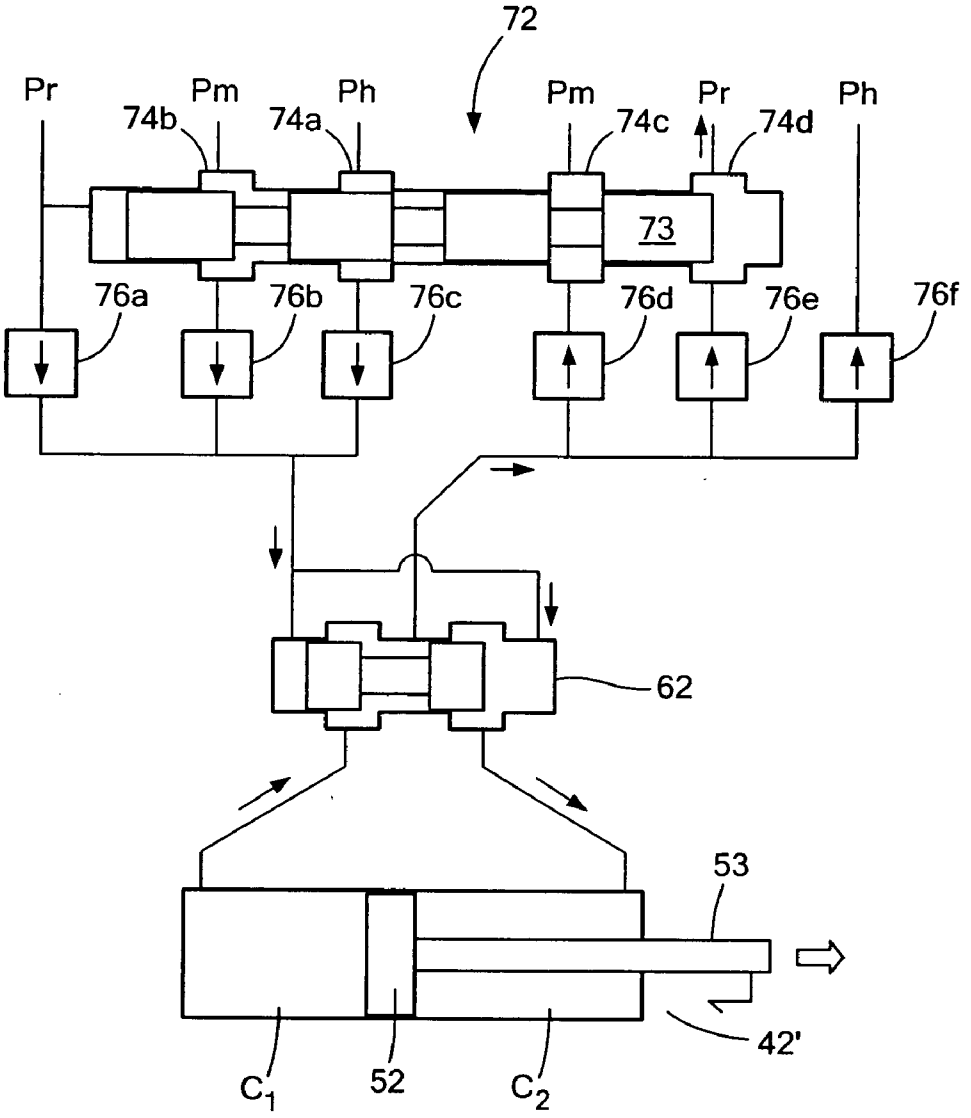
72
Pr
Pm
Ph
74b
74a
Pm
74c
Pr
74d
Ph
73
76a
76b
76c
76d
76e
76f
62
53
42'
C1
52
C2

FIG. 9F

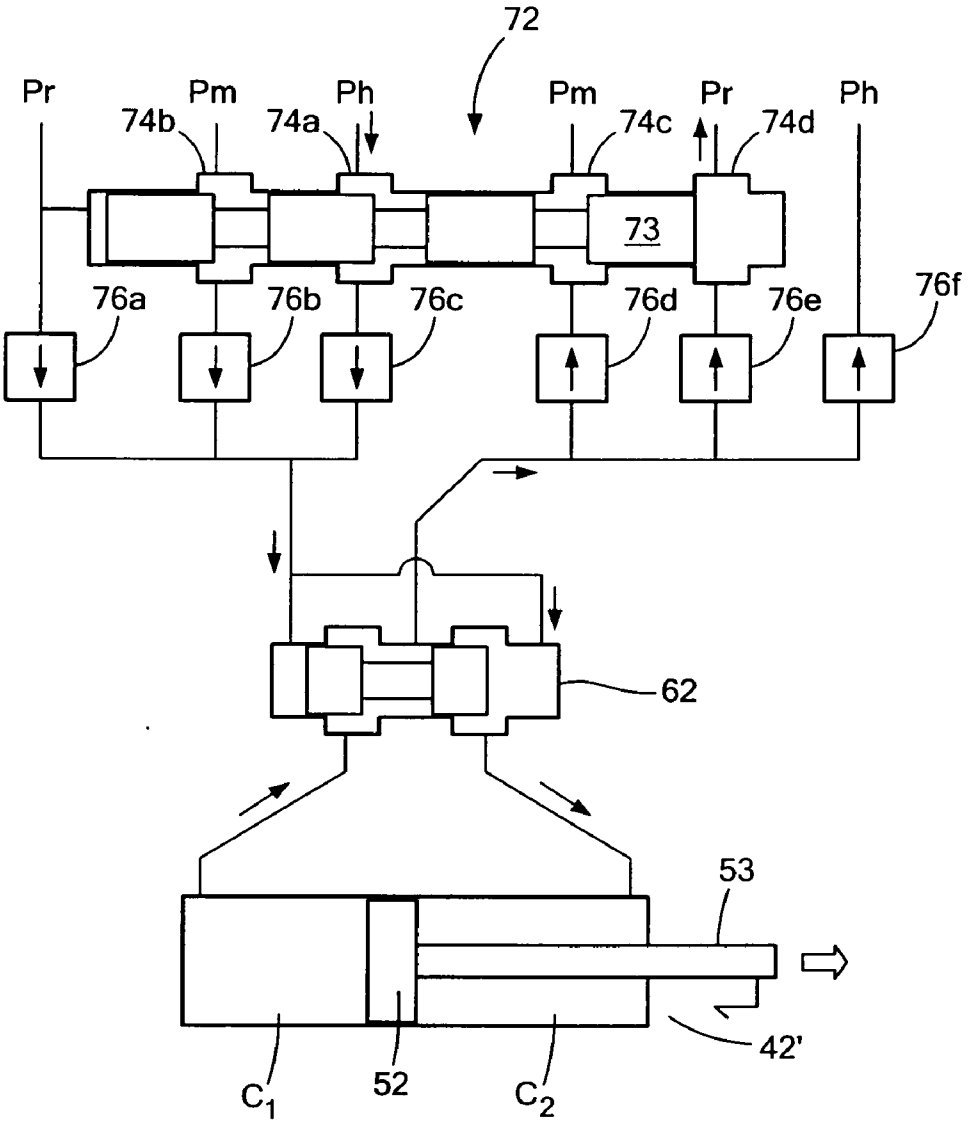
72
Pr
Pm
Ph
Pm
Pr
Ph
74b
74a
74c
74d
73
76a
76b
76c
76d
76e
76f
62
53
42'
C1
52
C2

FIG. 9G

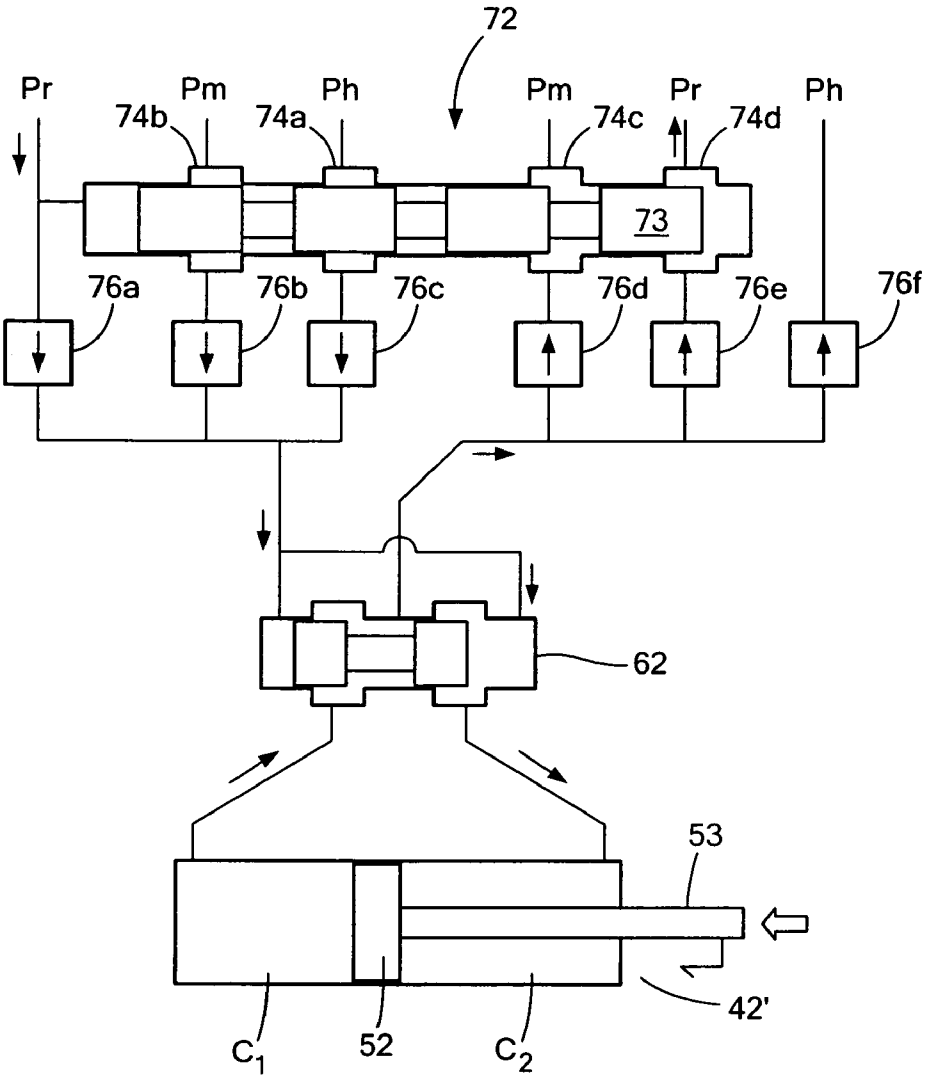
72
Pr
Pm
Ph
74b
74a
Pm
74c
Pr
74d
Ph
73
76a
76b
76c
76d
76e
76f
62
53
42'
C1
52
C2

FIG. 9H

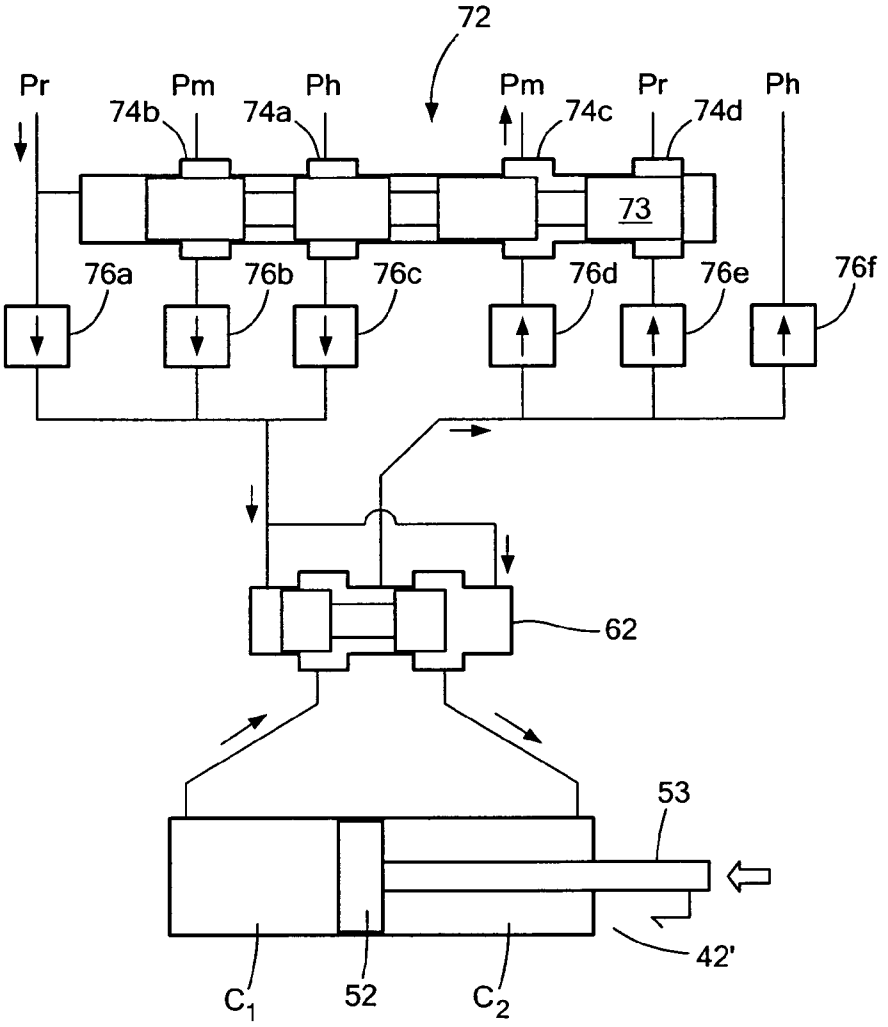
72
Pr
Pm
Ph
74b
74a
Pm
74c
Pr
74d
Ph
73
76a
76b
76c
76d
76e
76f
62
53
42'
C1
52
C2

FIG. 9I

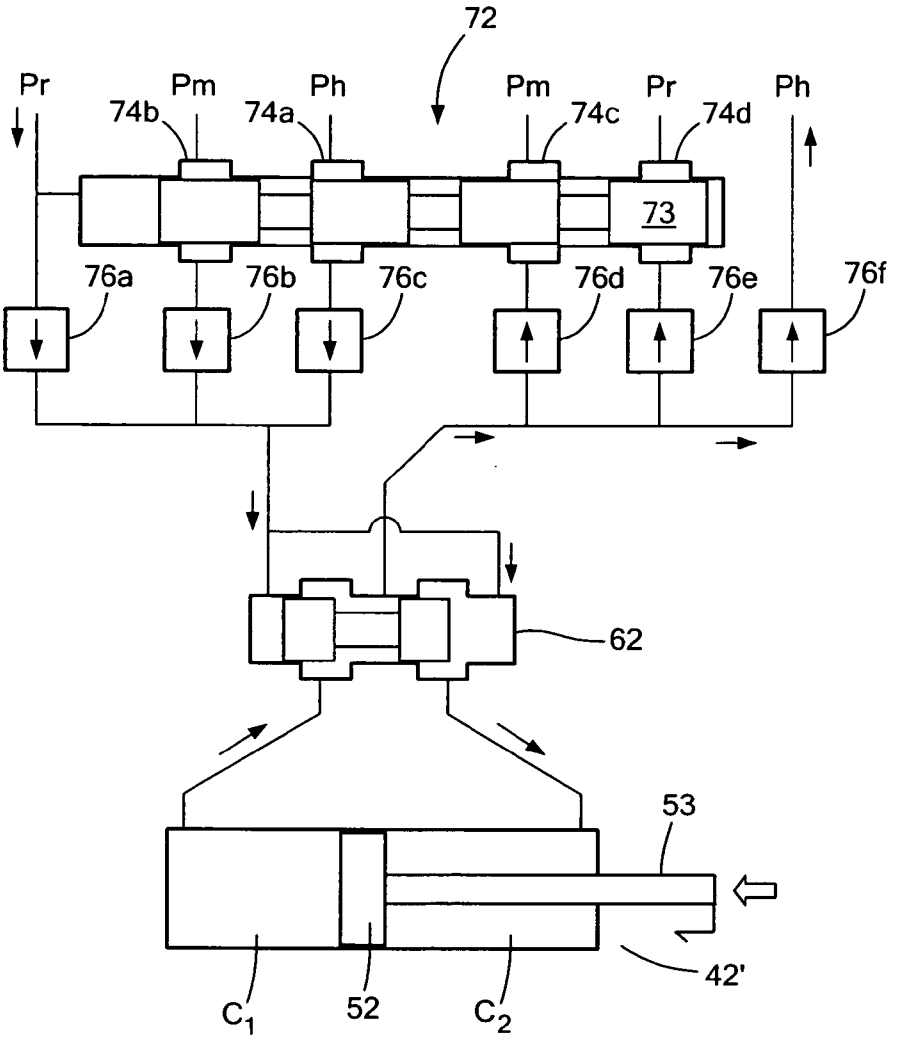
72
Pr
Pm
Ph
Pm
Pr
Ph
74b
74a
74c
74d
73
76a
76b
76c
76d
76e
76f
62
53
42'
C1
52
C2

FIG. 9J

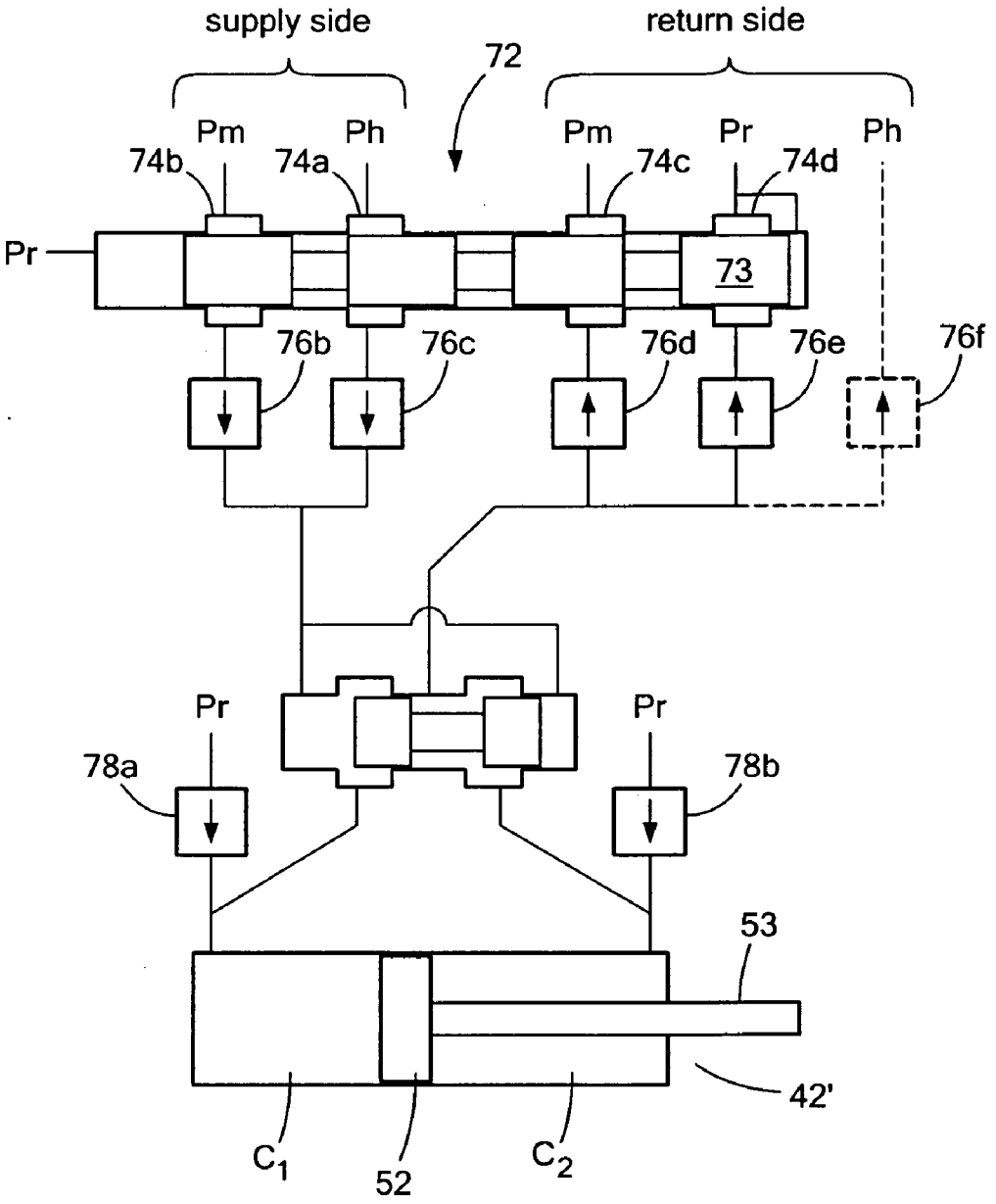
supply side
return side
72
Pm
Ph
Pm
Pr
Ph
74b
74a
74c
74d
Pr
73
76b
76c
76d
76e
76f
Pr
Pr
78a
78b
53
42'
C1
52
C2

FIG. 10

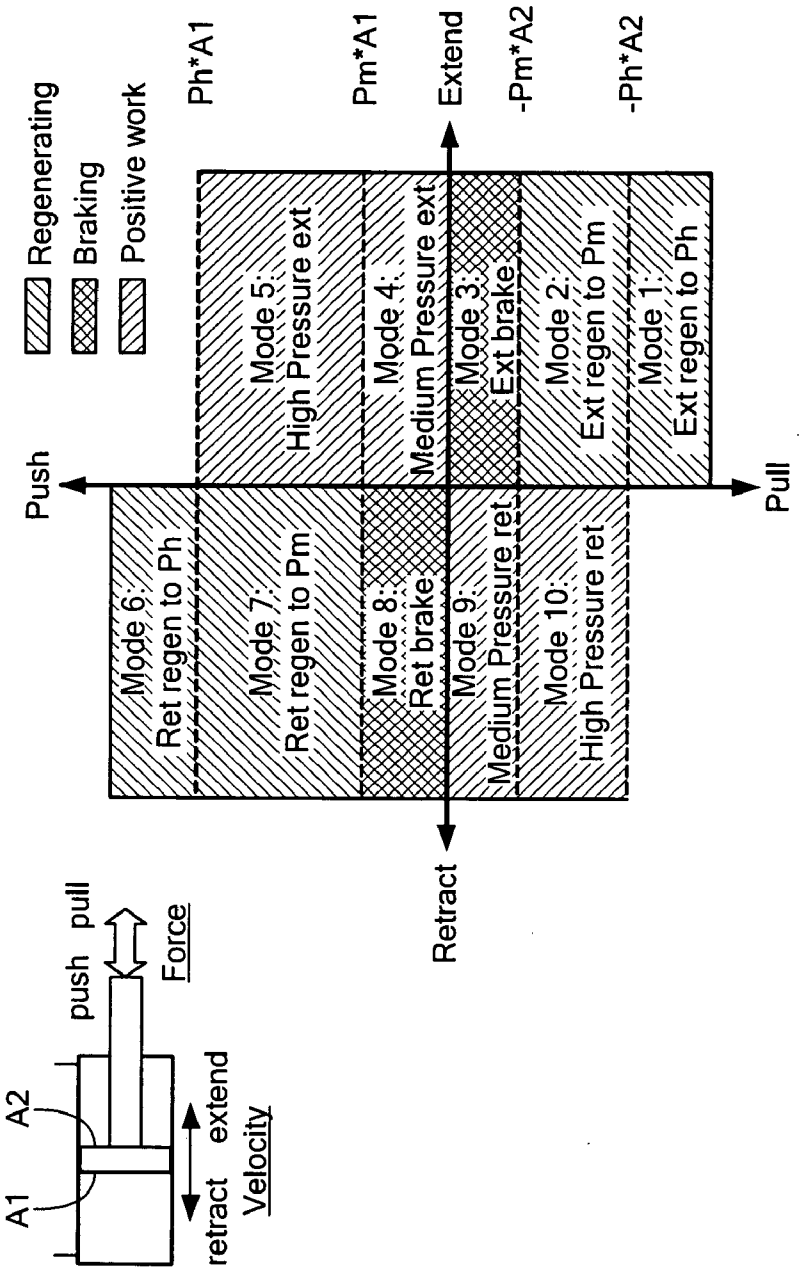
Regenerating
Braking
Positive work
Ph*A1
Pm*A1
Extend
-Pm*A2
-Ph*A2
Push
Pull
Retract
Mode 6: Ret regen to Ph
Mode 7: Ret regen to Pm
Mode 8: Ret brake
Mode 9: Medium Pressure ret
Mode 10: High Pressure ret
Mode 5: High Pressure ext
Mode 4: Medium Pressure ext
Mode 3: Ext brake
Mode 2: Ext regen to Pm
Mode 1: Ext regen to Ph
push pull
Force
A2
A1
retract extend
Velocity

FIG. 11

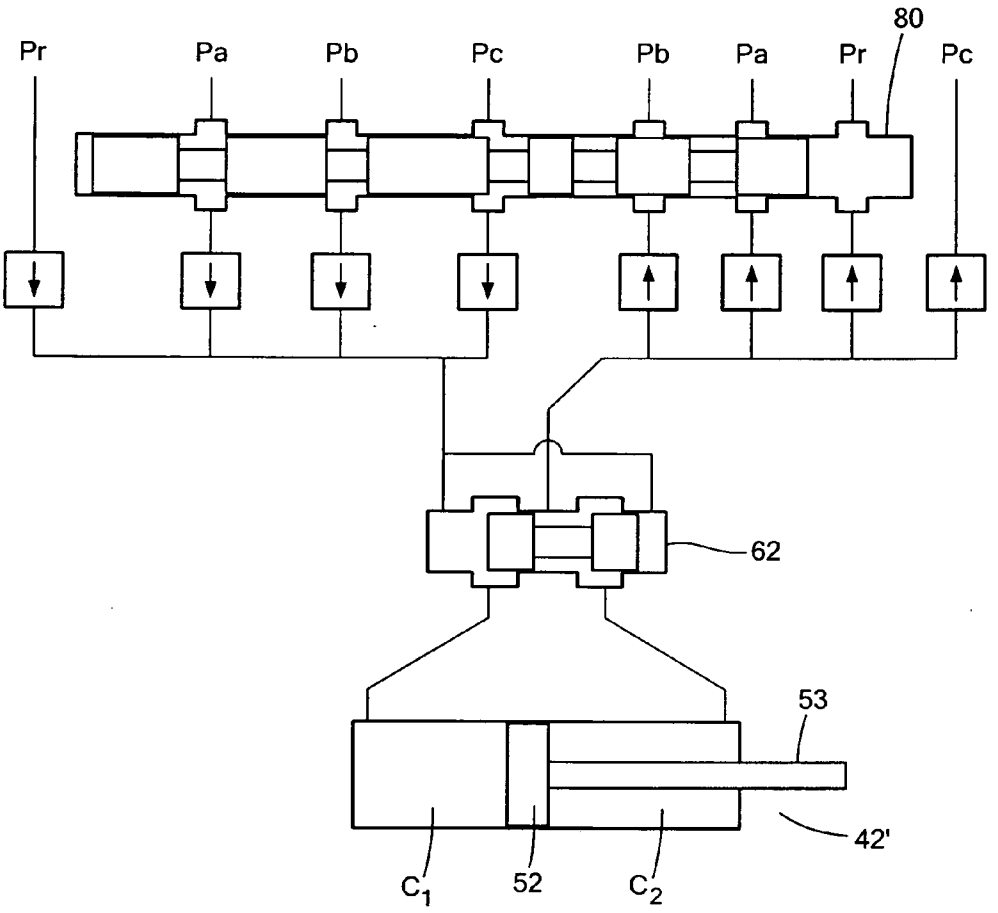

FIG. 12

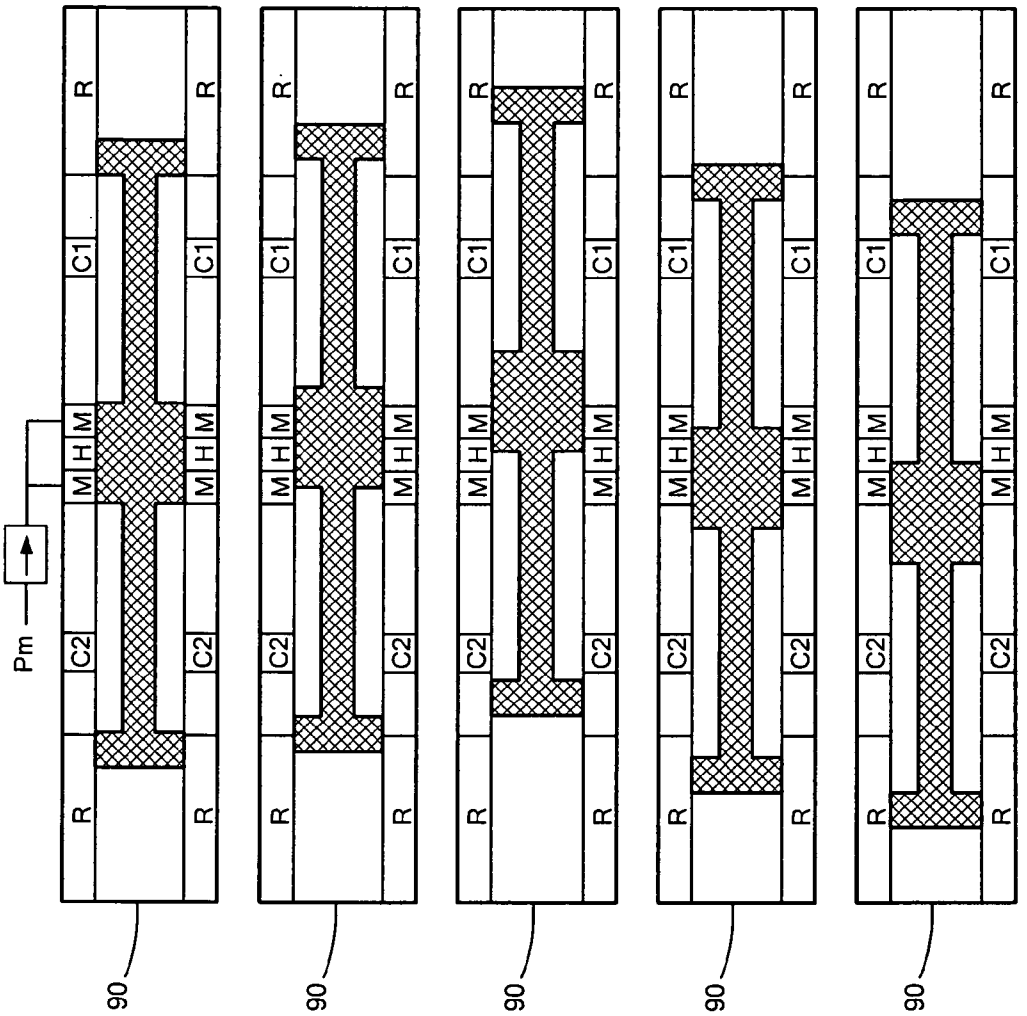

FIG. 13A

FIG. 13B

FIG. 13C

FIG. 13D

FIG. 13E

FIG. 14A

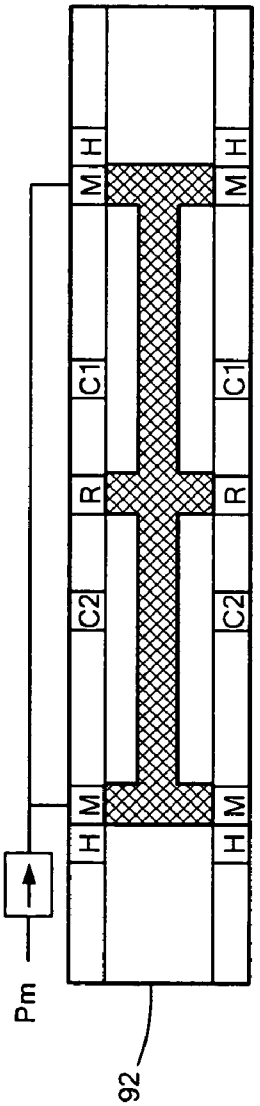

FIG. 14B

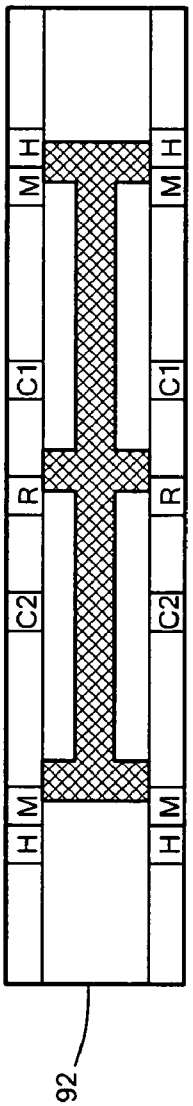

FIG. 14C

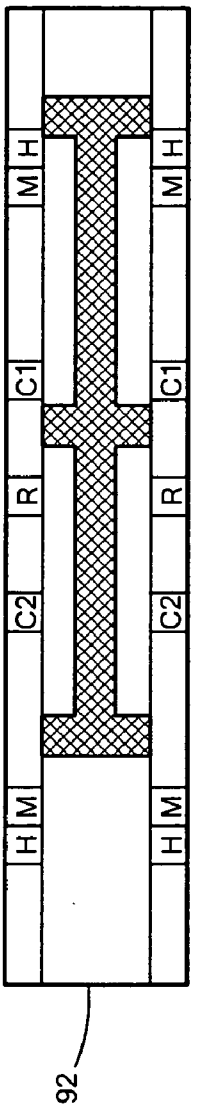

FIG. 14D

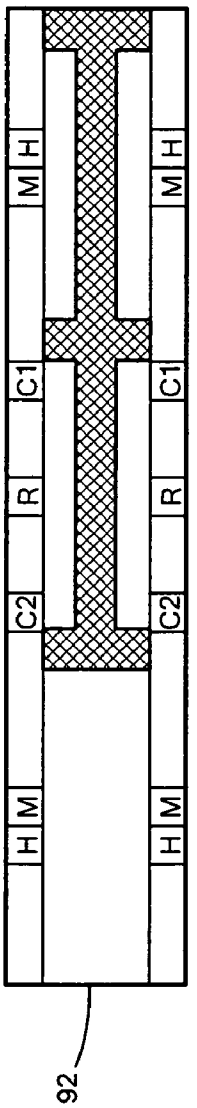

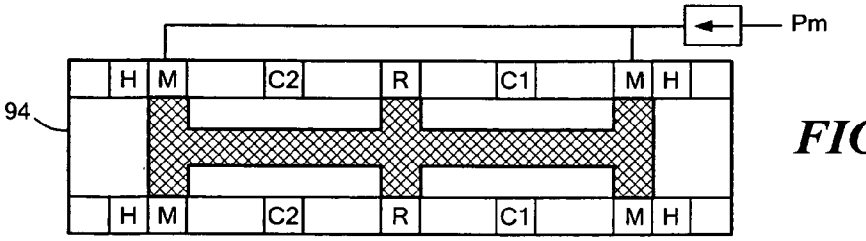

FIG. 15A

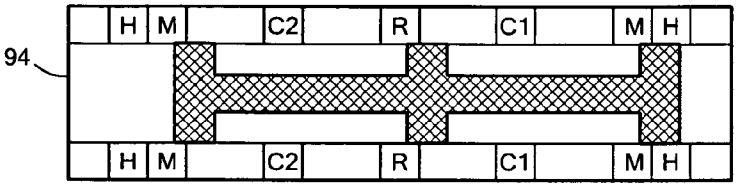

FIG. 15B

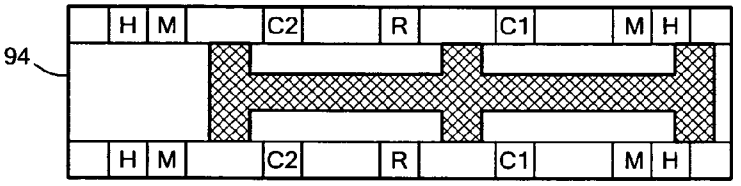

FIG. 15C

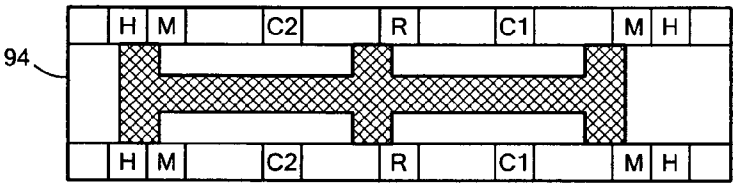

FIG. 15D

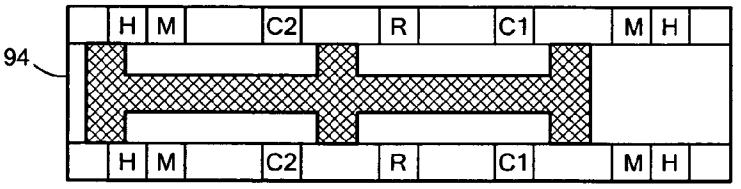

FIG. 15E

HYDRAULIC CIRCUIT

FIELD OF THE INVENTION

[0001] The subject invention relates to hydraulic circuits and actuators.

BACKGROUND OF THE INVENTION

[0002] Hydraulic systems including actuators are well known. Typically, a pump supplies hydraulic fluid under pressure to an actuator via a valve. In U.S. Pat. No. 5,289,680 incorporated herein by this reference, actuators can be alternatively connected to a large or a small displacement pump via a selector valve to provide different flow rates to the actuators. U.S. Pat. No. 6,067,946, also incorporated herein by this reference, discloses a poppet valve actuatable using high pressure hydraulic fluid (500-3,000 psig) and then low pressure hydraulic fluid (25-100 psig). U.S. Pat. No. 7,600,715 discloses redundant hydraulic systems; U.S. Pat. No. 5,615,553 discloses a hydraulic circuit in which one pump supplements another; and U.S. Pat. No. 7,401,465 discloses two actuators, one connected to an engine driven high pressure positive displacement pump and another connected to an engine driven low pressure positive displacement pump. U.S. Pat. No. 6,305,163 discloses a walking robot and a load sensing hydraulic system. Published U.S. Patent Application No. US 2010/0090638 also discloses a walking robot with unique actuators. All of these references are also incorporated herein by this reference.

[0003] Thus, the art includes a variety of hydraulic systems.

[0004] In some environments, the power available for the pump(s) in the hydraulic system is limited. In the case of walking robots, for example, a robot must transport its own internal combustion engine and fuel to provide power for driving the pumps. The larger the engine (and its fuel supply), the less cargo that can be transported by the robot.

[0005] In such a robot, the actuators intermittently require high pressure actuation but much of the time the forces are low and the actuators require less pressure.

SUMMARY OF THE INVENTION

[0006] It is therefore an aspect of the invention, in one preferred embodiment, to provide a new hydraulic circuit in which an actuator is driven using high pressure hydraulic fluid or medium pressure hydraulic fluid depending on various criteria in order to reduce the power requirements of the system employing the hydraulic circuit. In one preferred embodiment, a valve subsystem is configured and controllable to actuate the actuator in various modes including high and medium pressure extension and retraction, regeneration, braking, coasting, and the like.

[0007] The invention features, in one aspect, a hydraulic circuit comprising a high pressure source of high pressure hydraulic fluid, a medium pressure source of medium pressure hydraulic fluid, and a low pressure return for low pressure return hydraulic fluid. A valve subsystem is between the high pressure source, the medium pressure source, the low pressure return, and an actuator. The valve subsystem is controllable to drive the actuator using the high pressure hydraulic fluid or the medium pressure hydraulic fluid switching between the two and also to direct low pressure hydraulic fluid exiting the actuator to the low pressure return. A controller is responsive to high pressure criteria and medium pressure criteria associated with the actuator and is configured to switch the valve subsystem to present high pressure hydraulic fluid to the actuator in response to high pressure criteria and to present medium pressure hydraulic fluid to the actuator in response to medium pressure criteria.

[0008] Typically, the actuator is a double acting actuator. The high and medium pressure criteria are typically a function of the force and/or speed to be produced by the actuator. In some embodiments, the valve subsystem includes a pressure control valve configured to select which of the high pressure hydraulic fluid and the medium pressure hydraulic fluid is delivered to the actuator. The valve subsystem may further include a direction control valve configured to select the direction of action of the actuator. In one version, the pressure control valve is switchable to direct high or medium pressure hydraulic fluid to the direction control valve which may be a four-way direction control valve.

[0009] The pressure control valve in some embodiments may include means for controlling the flow rate of the hydraulic fluid delivered to the actuator. In one example, the pressure control valve includes a supply side including high pressure hydraulic fluid and medium pressure hydraulic fluid ports and a return side including medium pressure hydraulic fluid and low pressure return hydraulic fluid ports.

[0010] The valve subsystem may be configured to valve low pressure return hydraulic fluid to the actuator and/or to control the flow rate of hydraulic fluid delivered to the actuator. Also, the valve subsystem may be configured to selectively valve high pressure hydraulic fluid produced by the actuator to the high pressure source and to selectively valve medium pressure hydraulic fluid produced by the actuator to the medium pressure hydraulic fluid source.

[0011] In some embodiments, a spool valve is configured to both select which of the high pressure hydraulic fluid and the medium pressure hydraulic fluid is delivered to the actuator and to select the direction of action of the actuator. In some designs, the valve subsystem includes a valve with a spool and ports arranged such that movement of the spool in one direction progresses from providing medium pressure fluid to the actuator and then providing high pressure fluid to the actuator. In one example, the spool valve has a return side and a supply side configured such that movement of the spool in one direction provides progressively decreasing pressure fluid on the return side and then provides progressively increasing pressure fluid on the supply side.

[0012] For a double acting actuator, the valve subsystem is preferably configured to actuate the actuator in a first direction and a second direction and in four or more modes including, for example, regeneration of high pressure hydraulic fluid during actuation of the actuator in both directions, regeneration of medium pressure hydraulic fluid during actuation in both directions, braking of the actuator during actuation in both directions, medium pressure actuation of the actuator both directions, and high pressure actuation of the actuator in both directions. During a change in modes, it is preferred that flow to the actuator is not interrupted.

[0013] Also featured is a method of actuating an actuator comprising producing high pressure hydraulic fluid, producing medium pressure hydraulic fluid, and valving low pressure hydraulic fluid. High and medium pressure criteria are established for the actuator. Then, in response to high pressure criteria, the actuator is driven using high pressure hydraulic fluid and, in response to medium pressure criteria, the actuator is driven using medium pressure fluid. The method may include selecting which of the high pressure

hydraulic fluid and the medium pressure hydraulic fluid is delivered to the actuator and also selecting the direction of the actuator. The flow rate of the hydraulic fluid delivered to the actuator may be controlled. Low pressure return hydraulic fluid can be presented to the actuator. High and medium pressure hydraulic fluid produced by the actuator can be valved.

[0014] For an actuator with first and second chambers, the method may include selectively valving high pressure hydraulic fluid to each chamber, medium pressure hydraulic fluid to each chamber, and low pressure hydraulic fluid from each chamber and also, in one preferred embodiment, selectively valving high pressure hydraulic fluid from each chamber, medium pressure hydraulic fluid from each chamber, and low pressure hydraulic fluid to each chamber.

[0015] The subject invention, however, in other embodiments, need not achieve all these objectives and the claims hereof should not be limited to structures or methods capable of achieving these objectives.

BRIEF DESCRIPTION OF THE SEVERAL VIEWS OF THE DRAWINGS

[0016] Other objects, features and advantages will occur to those skilled in the art from the following description of a preferred embodiment and the accompanying drawings, in which:

[0017] FIG. **1** is a schematic three-dimensional front view showing an example of a walking robot in accordance with the invention;

[0018] FIG. **2** is a schematic side view showing an example of a robot leg and an actuator for the robot of FIG. **1**;

[0019] FIG. **3** is a schematic block diagram showing several of the primary components associated with an example of a new hydraulic circuit in accordance with the invention;

[0020] FIG. **4** is a schematic hydraulic circuit diagram showing one example of a valve subsystem useful for a double acting actuator;

[0021] FIGS. **5**A-**5**F are schematic views of the valve subsystem shown in FIG. **4** depicting the various modes available including medium pressure extension, high pressure extension, medium pressure retraction, high pressure retraction, high pressure extension regeneration, and high pressure retraction regeneration, respectively;

[0022] FIG. **6** is a schematic hydraulic circuit diagram showing another example of a valve subsystem in accordance with the invention;

[0023] FIG. **7**A-**7**J are schematic diagrams showing the different positions of the valves of the valve subsystem shown in FIG. **6** in order to actuate the actuator in a variety of modes including medium pressure extension, high pressure extension, extension regeneration to the high pressure source, extension regeneration to the medium pressure source, extension braking, medium pressure retraction, high pressure retraction, retraction regeneration to the high pressure source, retraction regeneration to the medium pressure source, and retraction braking, respectively;

[0024] FIG. **8** is a schematic hydraulic circuit diagram showing another example of a valve subsystem for a double acting actuator;

[0025] FIGS. **9**A-**9**J are schematic views showing different positions of the valve shown in FIG. **8** in order to actuate the actuator in a variety of modes including medium pressure extension, high pressure extension, extension regeneration to the high pressure source, extension regeneration to the medium pressure source, extension braking, medium pressure retraction, high pressure retraction, retraction braking, retraction regeneration to the medium pressure source, and retraction regeneration to the high pressure source, respectively;

[0026] FIG. **10** is a schematic view showing a minor variation on the embodiment shown in FIGS. **8**, **9**A-**9**J;

[0027] FIG. **11** is a chart depicting ten possible modes of operation in accordance with several examples of the subject invention;

[0028] FIG. **12** is a schematic view of a portion of a hydraulic circuit showing a multiple pressure system in accordance with another example of the invention;

[0029] FIGS. **13**A-**13**E are schematic views showing an example of a multi-pressure spool valve in accordance with an example of the invention;

[0030] FIGS. **14**A-**14**B are schematic views showing an example of another spool valve in accordance with an example of the subject invention; and

[0031] FIGS. **15**A-**15**E are schematic views showing a spool valve in accordance with still another example of the subject invention.

DETAILED DESCRIPTION OF THE INVENTION

[0032] Aside from the preferred embodiment or embodiments disclosed below, this invention is capable of other embodiments and of being practiced or being carried out in various ways. Thus, it is to be understood that the invention is not limited in its application to the details of construction and the arrangements of components set forth in the following description or illustrated in the drawings. If only one embodiment is described herein, the claims hereof are not to be limited to that embodiment. Moreover, the claims hereof are not to be read restrictively unless there is clear and convincing evidence manifesting a certain exclusion, restriction, or disclaimer.

[0033] The subject invention can be employed with a variety of different robotic, bionic, and other systems. As one example, FIG. **1** shows a legged robot **10** called "Big Dog" under development by the applicant hereof (Boston Dynamics, Inc., Waltham, Mass.). Robot leg **12** includes thigh member **14** and shin member **16**. FIG. **2** shows, in a highly schematic fashion, piston-cylinder type double action actuator assembly **20** between thigh member **14** and shin member **16**. It is understood that various mechanical linkages and the like associated with piston-cylinder assembly **20** are not shown. A walking robot in accordance with the subject invention typically includes a number of such double acting actuators. Prototype versions of robot **10**, FIG. **1** are able to walk, run, climb, walk across rubble, and carry a **3301***b* load. But, it may be desirable to increase the load carrying capacity of robot **10** meaning leg **12**, FIG. **2** will experience greater forces. Increasing the load carrying capacity, in turn, results in an increase in the size and capability of the hydraulic power plant. That result, however, undesirably lowers the payload capacity of the robot. It would also be desirable to reduce the size and weight of the existing power plant.

[0034] There are times when actuator **20** provides high force operations such as when foot **17** is engaged with the ground, and leg **12** bears weight. Another example is when a given leg is supporting a greater proportion of the total load due to a specific maneuver or behavior. Jumping is but one example of high force operation. In such modes, high pressure hydraulic fluid may be required. In many other instances,

only medium force operation is required such as when thigh member **14** lifts shin member **16** to swing the leg forward. Here, perhaps only medium pressure hydraulic fluid is required to drive the actuator. Note, however, that high pressure actuation does not necessarily always correlate to high force operations. FIG. **3** shows a high pressure source of high pressure hydraulic fluid P_h (e.g., 3,000 psig), for example, via variable displacement pump **30***a* (driven by power source **32**, e.g., an internal combustion engine or electric motor carried by the robot) and accumulator **34***a*. A medium pressure source of medium pressure hydraulic fluid P_m (e.g., 1,000-1, 500 psig), is produced, for example, by variable displacement pump **30***b* (also driven by engine **32**) and accumulator **34***b*. A low pressure return for low pressure hydraulic fluid P_r (e.g., 100 psig) to fluid storage **38** is also shown. Valve subsystem **40** is controllable to drive actuator **42** (preferably a double acting actuator such as the piston-cylinder arrangement shown in FIG. **2**) using either high pressure fluid P_h or medium pressure fluid P_m and to direct low pressure fluid P_r exiting the actuator to fluid source **38**. In some embodiments, Valve subsystem **40** may also supply low pressure flow to one or more actuators, thus conserving energy. In other variations, valve subsystem **40** directs flow from one or more actuators to the medium pressure accumulator **34***b* or high pressure accumulator **34***a* which regenerates some of the mechanical work done on the actuator(s) and stores the energy for later use. In many embodiments, however, the valve subsystem **40** is controllable to "drive" actuator **42** using either the high pressure fluid source P_h or the medium pressure fluid source P_m (i.e. consuming high or medium pressure flow). Typically, valve system **40** will also throttle the flow as needed to provide the desired actuator force or speed.

[0035] Signals from sensor(s) **44** may be used to establish high pressure criteria and medium pressure criteria for actuator **42**. One sensor subsystem typically includes a load sensor and position sensor measuring the force and displacement of the actuator. Many other sensor arrangements are possible, for instance, measuring the actuator chamber pressures, or measuring the force at foot **17** and backing out the actuator force based on the kinematics and dynamics of the robot's links.

[0036] Controller **48** (e.g., a controller, processor, or other electronic circuit) is responsive to sensor subsystem **44** and also (typically) robot behavioral processor(s) **46** and is configured (e.g., programmed) to electronically operate valve subsystem **40** depending on whether actuator **42** is to be actuated using the high pressure source or the medium pressure source, or in some other mode depending on various criteria established by robot processing subsystem **46**, typically in response to the output of sensor subsystem **44**. Note that control circuit **48** need not be a separate chip or component. Instead, the logic of controller **48** could be integrated within the control system of the robot and/or within the robot processing subsystem **46**. There are many ways the controller can choose when to switch between medium and high pressure. The inputs include the desired force and speed, actual force and speed, and predicted force and speed. Some subset of these may be used to make the decision. In general, the controller is programmed to try and maintain enough "pressure margin" so that the actuator does not run out of force or speed capability.

[0037] In one example, when sensor subsystem **44** signals controller **48** that actuator **42** requires only medium pressure, controller **48** then controls valve subsystem **40** to draw from the medium pressure source to supply hydraulic fluid to actuator **42**. In another example, sensor subsystem **44** dictates that actuator **42** requires high pressure hydraulic fluid actuation and controller **48** then controls valve subsystem **40** to use the high pressure source to supply hydraulic fluid to actuator **42**. The high pressure criteria and the medium pressure criteria associated with the actuator may vary depending on the design of the system and may be a function of the output of sensor subsystem **44** and/or robot behavioral processors **26**.

[0038] Controller **48**, in response to the high pressure criteria and medium pressure criteria, controls valve subsystem **40** accordingly. One way to control hydraulic valves is to use a two stage system where an electrically controllable valve controls a "pilot" pressure which moves a spool valve. Another method is to drive the moving part of the valve (e.g. a spool) directly with an electric actuator. In one example, the piston of actuator **42** can be extended using high pressure fluid (P_h) in response to high pressure criteria and then retracted using medium pressure fluid (P_m) in response to medium pressure criteria. With many actuators in a typical system, the power requirements of the system are thus lowered since high pressure hydraulic fluid is not always utilized. In examples of the invention, the power requirements are lowered by 50% or more.

[0039] FIG. **4** shows but one example of a double acting actuator **42'** with cylinder **50** and piston **52** defining chambers C_1 and C_2. The valve subsystem in this example includes pressure control valve **60** and direction control valve **62**. In the position shown with pressure control valve **60** open, high pressure hydraulic fluid P_h is delivered to chamber C_1 and low pressure hydraulic fluid P_r exits chamber C_2. Anti-cavitation check valves **64***a* and **64***b* are also provided as shown. By controlling direction control valve **62** and opening and closing pressure control valve **60** under the command of controller **48**, FIG. **3**, other modes are possible. This valve subsystem arrangement allows medium pressure extension of piston **52**, high pressure extension of piston **52**, medium pressure retraction of piston **52**, high pressure retraction of piston **52**, and high pressure fluid regeneration in either direction given a sufficiently large aiding load (i.e. a load that does work on the actuator). Pressure control valve **60** may be a 2-way valve and direction control valve **62** may be a 4-way valve. Anti-cavitation check valves **64***a* and **64***b* allow for higher speeds when the actuator **42'** is doing negative work. This design also allows for a transition between medium pressure hydraulic fluid and high pressure hydraulic fluid without interrupting flow (i.e., without dead-heading). Pressure control valve **60**, in general, selects which of the high pressure hydraulic fluid and the medium pressure hydraulic fluid is delivered to the actuator. Direction control valve **62** is configured to select which of chambers C_1 and C_2 communicates with the low pressure return P_r. Typically, the actuator will tend to move in the direction that pushes fluid out to the low pressure return, however, under a large aiding load, the actuator **42'** can draw from the low pressure return and push high pressure fluid back (i.e. regenerate) to the high pressure source P_h. Direction control valve **62** uses spool **63** to open and close ports **65***a* and **65***b*. Spool **63** is typically moved right or left using an electric actuator or with fluid pressure to push or pull on spool extensions **67** as is well known in the art of servo-valve design. In subsequent figures, for simplicity, the spool extensions **67** have been omitted, but it should be assumed that the spool

position is controlled. Actuator speed is typically controlled by adjusting the position of spool **63** to partially open ports **65***a* and **65***b*.

[0040] FIG. **5**A shows double acting actuator **42'** in connection with direction control valve **62** and pressure control valve **60** in a medium pressure extension mode. Pressure control valve **60**, FIG. **5**A, is closed and medium pressure hydraulic fluid P_m from accumulator **34***b*, FIG. **3** enters direction control valve **62**, FIG. **5**A which is configured in this mode via the position of member **63** to valve medium pressure hydraulic fluid into chamber C_1 to drive piston **52** to the right, thus extending piston rod **53**. Fluid exiting chamber C_2 is directed by direction control valve **62** to the low pressure (Pr) fluid source **38**, FIG. **3**. When pressure control valve **60** opens, the high pressure fluid closes check valve **61** to encourage an uninterrupted flow of fluid to the actuator.

[0041] FIG. **5**B shows pressure control valve **60** open allowing high pressure hydraulic fluid P_h to be directed to chamber C_1. P_h in chamber C_1 causes high force extension of the piston **52**. Hydraulic fluid exiting chamber C_2 is directed by direction control valve **62** to the low pressure (P_r) fluid source **38**, FIG. **3**. This mode is called high pressure extension mode.

[0042] Depicted in FIG. **5**C is a medium pressure retraction mode in which valve **60** is closed and thus medium pressure hydraulic fluid P_m enters direction control valve **62** and is directed to chamber C_2, causing the piston **52** to retract under a medium force. Hydraulic fluid exiting chamber C_2 is directed by direction control valve **62** to the low pressure (P_r) fluid source **38**, FIG. **3**.

[0043] In a high pressure retraction mode, FIG. **5**D, valve **60** is open and high pressure hydraulic fluid P_h enters direction control valve **62** and is directed to chamber C_2, causing the piston **52** to retract with a higher force. Hydraulic fluid exiting chamber C_2 is directed by direction control valve **62** to the low pressure (P_r) fluid source **38**, FIG. **3**.

[0044] FIG. **5**E depicts a high pressure extension regeneration mode when a high force load pulls or extends piston rod **53**. Low pressure hydraulic fluid P_r is directed by valve **62** to chamber C_1. Low pressure hydraulic fluid P_r may also bypass valve **62** and enter chamber C_1 by passing through anti-cavitation check valve **64***a*. This avoids cavitation that might otherwise result if the actuator is extended rapidly. Extension of piston **52** when an aiding load is present results in high pressure hydraulic fluid in chamber C_2. High pressure fluid exits chamber C_2 and is directed by direction control valve **62** as well as open pressure control valve **60** to the high pressure (P_h) accumulator **34***a*, FIG. **3**. Thus, high pressure hydraulic fluid is regenerated and stored for future reuse.

[0045] FIG. **5**F shows a high pressure retraction regeneration mode. A high force pushing on piston rod **53** causes piston **52** to move to the left. Low pressure hydraulic fluid P_r is directed by valve **62** to chamber C_2. Low pressure hydraulic fluid P_r may also pass through anti-cavitation check valve **64***b* to chamber C_2. High pressure fluid in chamber C_1 is directed by direction control valve **62** as well as open pressure control valve **60** to accumulator **34***a*, FIG. **3**.

[0046] FIG. **6** shows an example of another valve subsystem including pressure control valve **70** and direction control valve **62** controlling the actuation of actuator **42'**. In this example, pressure control valve **70** is a three-way valve configured to select the appropriate pressure source P_m, P_h, or P_r (by nulling the valve). When the pressure control valve is set to null (ports blocked), the chamber C_2 draws from return (P_r) through one of the two check valves **64***a* and **64***b*. Direction control valve **62** controls which of chambers C_1 and C_2 communicates with P_r, and which communicates with the supply selected by the pressure control valve. Typically, valve **62** also controls the flow rate. With this valve subsystem, medium pressure extension of piston **52** is possible, as are high pressure extension, extension regeneration to the high pressure source, extension regeneration to the medium pressure source, extension braking, medium pressure retraction, high pressure retraction, retraction regeneration to the high pressure source, retraction regeneration to the medium pressure source, and retraction braking. These modes are depicted in FIG. **7**A-**7**J.

[0047] FIG. **7**A shows double acting actuator **42'** in connection with direction control valve **62** and pressure control valve **70** in medium pressure extension mode. Pressure control valve **70** is configured in this example to direct medium pressure hydraulic fluid P_m from accumulator **34***b*, FIG. **3**, to direction control valve **62**, FIG. **7**A, which is configured in this mode to direct P_m fluid into chamber C_1 to drive piston **52** and extend piston rod **53** with medium force. Lower pressure hydraulic fluid exiting chamber C_2 is directed by direction control valve **62** to the low pressure (P_r) fluid source **38**, FIG. **3**.

[0048] As depicted in FIG. **7**B, a high pressure extension mode is shown in which pressure control valve **70** directs high pressure hydraulic fluid P_h from accumulator **34***a*, FIG. **3** to direction control valve **62**, FIG. **7**B which directs P_h fluid into chamber C_1. P_h fluid in chamber C_1 drives extension of the piston **52** using high force. Lower pressure hydraulic fluid exiting chamber C_2 is directed by direction control valve **62** to the low pressure (P_r) fluid source **38**, FIG. **3**.

[0049] In extension regeneration to the high pressure source mode, depicted in FIG. **7**C, low pressure return hydraulic fluid P_r passes through anti-cavitation check valve **64***a* and enters chamber C_1. As piston **52** extends under an aiding load, high pressure hydraulic fluid in chamber C_2 is directed by direction control valve **62** to pressure control valve **70** configured in this mode to direct P_h fluid to accumulator **34***a*, FIG. **3**.

[0050] FIG. **7**D shows extension regeneration to the medium pressure source mode in which low pressure return hydraulic fluid P_r from fluid source **38**, FIG. **3**, passes through anti-cavitation check valve **64***a*, FIG. **7**D, before entering chamber C_1. As piston **52** extends when an aiding load is present, medium pressure hydraulic fluid forms in chamber C_2 and passes through direction control valve **62** and pressure control valve **70** to the medium pressure (P_m) accumulator **34***b*.

[0051] FIG. **7**E depicts the extension braking mode in which low pressure return hydraulic fluid P_r from fluid source **38**, FIG. **3**, passes through anti-cavitation check valve **64***a*, FIG. **7**E, before entering chamber C_1. Higher pressure fluid is forced out of chamber C_2 and is directed to pass through direction control valve **62** and back to the P_r source. In this mode, pressure control valve **70** is in the null position. If the direction control valve **62** is wide open (spool **63** to the right), there is little resistance to motion and the actuator is, in effect "coasting". If the spool is moved to only partially open port **65***b*, then the actuator will act like a brake.

[0052] In FIG. **7**F the medium pressure retraction mode is depicted in which pressure control valve **70** is configured to direct medium pressure hydraulic fluid P_m from accumulator **34***b*, FIG. **3**, to pass through and enter direction control valve

62, FIG. 7F, which is configured to direct the fluid to pass through and enter chamber C_2. Piston **52** retracts and fluid in chamber C_1 is directed through direction control valve **62** to the low pressure source P_r.

[0053] FIG. 7G depicts a high pressure retraction mode in which pressure control valve **70** directs high pressure hydraulic fluid P_h from accumulator **34***a*, FIG. **3**, to direction control valve **62**, FIG. 7G which is configured to direct this fluid to chamber C_2. Piston **52** retracts, and fluid, present in chamber C_1, is directed by direction control valve **62** to the low pressure fluid source **38**, FIG. **3**.

[0054] FIG. 7H shows a retract regeneration to the high pressure source mode. In this mode, low pressure return fluid P_r from fluid source **38**, FIG. **3**, passes through anti-cavitation check valve **64***b*, FIG. 7H, before entering chamber C_2. Piston **52** retracts when a high force aiding load is present, causing pressure to build up in chamber C_1. The resultant high pressure fluid is directed by direction control valve **62** to pressure control valve **70**, configured to direct P_h fluid into accumulator **34***a*, FIG. **3**.

[0055] FIG. 7I depicts the retract regeneration to the medium pressure source mode, in which low pressure return fluid P_r from fluid source **38**, FIG. **3**, passes through anti-cavitation check valve **64***b* before entering chamber C_2. Piston **52** retracts when a medium force aiding load is applied, causing pressure to build up in chamber C_1. The resulting medium pressure fluid is directed through direction control valve **62** and into pressure control valve **70**, configured to direct P_m fluid to accumulator **34***b*, FIG. **3**. In a retraction braking mode, depicted in FIG. 7J, low pressure return hydraulic fluid P_r from fluid source **38**, FIG. **3**, passes through anti-cavitation check valve **64***b*, FIG. 7J, before entering chamber C_2. Under an aiding load, piston **52** retracts, pushing fluid out of chamber C_1 back to the low pressure return **38**, FIG. **3** as directed by the direction control valve **62**. If the direction control valve **62** is wide open (spool **63** to the left), there is little resistance to motion and the actuator is, in effect "coasting". If the spool is moved to only partially open port **65***a*, then the actuator will act like a brake.

[0056] In FIG. **8**, pressure control valve **72** includes a supply side with high pressure hydraulic fluid P_h and medium pressure hydraulic fluid P_m, via ports **74***a* and **74***b*, respectively, and a return side with medium pressure port **74***c* and low pressure return hydraulic fluid port **74***d*. Check valves **76***a*, **76***b*, **76***c*, **76***d*, **76***e*, and **76***f* are also provided. This valve subsystem uses a pressure control valve configured to select both the supply and return side pressures. Pressure control valve **72** has a moving part (e.g. spool **73**) typically driven by a small electric actuator or by pressure applied to a spool extension such as spool extension **67**, FIG. **4**. Four way directional control valve **62**, FIG. **8**, is used to control the direction of actuator **42'**. Actuator velocity is typically controlled by throttling flow at pressure control valve **72**. Throttling flow at the directional control valve is less reliable since it may cause cavitation in the braking and regeneration modes. This valve subsystem allows low pressure extension of piston **52**, high pressure extension, extension regeneration to the high pressure source, extension regeneration to the medium pressure source, extension braking, medium pressure retraction, high pressure retraction, retraction braking, retraction regeneration to the high pressure source, and retraction regeneration to the medium pressure source.

[0057] In FIG. **9**A, a medium pressure extension mode is shown whereby pressure control valve **72** directs medium pressure hydraulic fluid P_m from accumulator **34***b*, FIG. **3**, through via port **74***b*, FIG. **9**A, and check valve **76***b* to direction control valve **62**, which is configured to direct P_m fluid to chamber C_1, causing piston **52** to extend with medium force. Return fluid leaves chamber C_2 and is directed by direction control valve **62**, to check valve **76***e* on its way through pressure control valve **72** via port **74***d* into the P_r fluid source **38**, FIG. **3**, for future use.

[0058] As depicted in FIG. **9**B, a high pressure extension mode is shown whereby pressure control valve **72** now is positioned to direct high pressure hydraulic fluid P_h from accumulator **34***a*, FIG. **3**, via port **74***a*, FIG. **9**B and check valve **76***c* to direction control valve **62** which is configured to direct P_h fluid into chamber C_1 causing piston **52** to extend with higher force. Return fluid leaves chamber C_2 and is directed by direction control valve **62** to check valve **76***e*, and then via pressure control valve **72** and port **74***d* to the P_r fluid source **38**, FIG. **3**.

[0059] FIG. **9**C depicts an extension regeneration to the high pressure source mode whereby low pressure return fluid P_r from fluid source **38**, FIG. **3**, passes through check valve **76***a*, FIG. **9**C, before being directed by direction control valve **62** to enter chamber C_1. High pressure hydraulic fluid is generated in chamber C_2 and is directed by direction control valve **62** and pressure control valve **72** through check valve **76***f* to the high pressure accumulator **34***a*, FIG. **3** for future use.

[0060] In FIG. **9**D, an extension regeneration to the medium pressure source mode is depicted whereby low pressure return fluid P_r from fluid source **38**, FIG. **3**, passes through check valve **76***a*, FIG. **9**D, before being directed by direction control valve **62** into chamber C_1. Medium pressure hydraulic fluid is now generated in chamber C_2 and is directed by direction control valve **62** to check valve **76***d* and by valve **72** via port **74***c* to the P_m accumulator **34***b*, FIG. **3**, for future use.

[0061] In an extension braking mode, depicted in FIG. **9**E, low pressure return fluid P_r from fluid source **38**, FIG. **3**, passes through check valve **76***a*, FIG. **9**E, before being directed by direction control valve **62** to chamber C_1. Return fluid exits chamber C_2 and is directed by direction control valve **62** to check valve **76***e* before being directed by pressure control valve **72** to the P_r return line via port **74***d* as shown.

[0062] FIG. **9**F depicts a medium pressure retraction mode whereby medium pressure hydraulic fluid P_m from accumulator **34***b*, FIG. **3**, is directed by pressure control valve **72**, FIG. **9**F via port **74***b* into check valve **76***b* and then directed by direction control valve **62** into chamber C_2 causing piston **52** to retract with medium force. Return fluid exits chamber C_1 and is directed by direction control valve **62** to check valve **76***e* and then directed to the P_r return line by pressure control valve **72** via port **74***d* as shown.

[0063] As depicted in FIG. **9**G, a high pressure retraction mode is shown whereby high pressure hydraulic fluid P_h from accumulator **34***a*, FIG. **3** is directed by pressure control valve **72**, FIG. **9**G, via port **74***a* to check valve **76***c* and then directed by direction control valve **62** to chamber C_2 causing piston **52** to retract with high force.

[0064] In a retraction braking mode as depicted in FIG. **9**H, low pressure return fluid P_r from fluid source **38**, FIG. **3**, passes through check valve **76***a*, FIG. **9**H, before being directed by direction control valve **62** to chamber C_2. Fluid also exits chamber C_1 and is directed by direction control

valve **62** into check valve **76***e* before being directed by pressure control valve **72** via port **74***d* to the P_r fluid source **38**, FIG. **3**.

[0065] FIG. **9**I depicts a retraction regeneration to the medium pressure source mode whereby low pressure return fluid P_r from fluid source **38**, FIG. **3**, passes through check valve **76***a,* FIG. **9**A and is directed by direction control valve **62** into chamber C_2. An aiding load applied to piston rod **53** retracts it and generates medium pressure hydraulic fluid in chamber C_1 which is directed by direction control valve **62** to check valve **76***d* before being directed by pressure control valve **72** via port **74***c* to the P_m accumulator **34***b,* FIG. **3** for future use.

[0066] As depicted by FIG. **9**J, in a retraction regeneration to the high pressure source mode, high pressure hydraulic fluid is generated in chamber C_1 and is directed by direction control valve **62** and pressure control valve **72** through check valve **76***f* to the P_h accumulator **34***a,* FIG. **3**.

[0067] In the embodiment of FIGS. **8** and **9**A-**9**J, control of actuator speed is best achieved by moving the spool **73** of pressure control valve **72** so as to partially close the return side flow through ports **74***c* or **74***d.* Use of the directional control valve **62** to control flowrate is also possible, but can result in cavitation if the actuator is subject to a high-speed aiding load.

[0068] FIG. **10** shows a variation on the embodiment of FIGS. **8**, **9**A-**9**J in which the check valve **76***a,* FIG. **9**A, is replaced by two anti-cavitation check valves **78***a* and **78***b,* FIG. **10** each connecting between the low pressure source P_r and chambers C_1 and C_2 respectively. These valves prevent cavitation when there is a high-speed aiding load. In this variation, flowrate can be reliably controlled by the direction control valve **62** and/or by the pressure control valve **72**. This variation also shows check valve **76***f* with dashed lines to indicate that this valve is optional. It is needed only to allow the two "regeneration to the high pressure source" modes shown in FIGS. **91** and **9**J. For many applications, such as lifting and lowering a load, the load being lowered is generally not greater than the maximum load that can be raised, therefore regeneration to the high pressure source is rare and check valve **76***f* may be unnecessary. It should be mentioned that this variation, i.e. FIG. **10** without check valve **76***f,* still has the same force capability as when check valve **76***f* is present since either or both of the two control valves **62** and **72** can resist the flow of fluid leaving C_1 or C_2, but without check valve **76***f,* the circuit is regenerative only to the medium pressure P_m, and is therefore less energy efficient when there is a high-force aiding load.

[0069] One advantage of the embodiments of FIG. **8**, **9**A-**9**J, and **10**, is that the pressure control valve **62** can change the operational mode without momentary interruption of the flowrate (known as "dead-heading"). This is especially important when actuator **42'** is coupled to a large, high-speed inertial load. Another advantage is that spool **73** of valve **72** is configured to open the ports in sequence **74***c,* **74***d,* **74***b,* **74***a,* to progressively lower the pressure on the return side from P_h to P_r (with Pr selected to supply flow) and then progressively increase the pressure on the supply side from P_m to P_h (while selecting P_r on the return side). This arrangement allows smooth control of actuator force and does not require large or abrupt changes in spool position.

[0070] FIG. **11** shows how a variety of modes are possible in different designs of the valve subsystem in accordance with examples of the invention. All ten modes are possible with the design shown in FIGS. **8** and **9**A-**9**J, and the variation of FIG. **10** including check valve **76***f.* Neglecting friction, leakage and pressure drops across valves and hoses, a 75% reduction in hydraulic power is theoretically possible, e.g. for an actuator repeatedly compressing and extending a linear spring, as compared with a conventional servo-actuator circuit.

[0071] FIG. **12** shows a pressure control valve **80** which allows extension of the concept of the subject invention to any number of supply pressures, for example, and P_a, P_b, P_c, return (P_r), where $P_a > P_b > P_c > P_r$. Advantageously, more supply pressures has only a minor effect on control complexity. Efficiency is improved due to more levels of regeneration and reduced pressure differentials between the chamber pressure and the supply. Accordingly, in this example, piston rod **53** can be driven to extend or retract using the highest pressure source available, an intermediate pressure source, or a lower pressure source.

[0072] FIGS. **13**A-**13**E show an example where the valve subsystem includes a dual pressure spool valve **90** configured to select which of the high pressure hydraulic fluid and the medium pressure hydraulic fluid is delivered to the actuator and also to select the direction of actuation of the actuator. The ports of the spool valve are preferably arranged such that movement of the spool in direction away from the null position first draws from the medium pressure source P_m (marked "M"), and then draws from the high pressure source P_h (marked "H"). Movement of the spool in the opposite direction switches which actuator chamber receives the supply pressure. The return flow is always directed to P_r (marked "R"), and the device is not capable of braking, nor regeneration to medium pressure. FIG. **13**A shows the null position where all ports are blocked. The four main operational modes are shown in FIGS. **13**B-**13**E. FIG. **13**B shows the medium pressure retraction mode for the piston where chamber C_1 is connected to the return hydraulic pressure and chamber C_2 is connected to the medium pressure source. FIG. **13**C shows a high pressure retraction mode where chamber C_1 is connected to the return hydraulic pressure source and chamber C_2 is connected to the high pressure fluid supply. FIG. **13**D shows medium pressure extension mode where chamber C_2 is connected to the return hydraulic fluid and chamber C_1 is connected to the medium pressure hydraulic fluid source. FIG. **13**E shows high pressure extension where chamber C_2 is connected to the return and chamber C_1 is connected to the high pressure hydraulic fluid. Under a sufficiently high force aiding load, the valve positions shown in FIGS. **13**C and **13**E can also be used to regenerate fluid back to the high pressure accumulator FIG. **3**, **34***a.*

[0073] FIGS. **14**A-**14**D show another spool valve variation **92** which controls both pressure and direction with a single valve. This variation includes a braking mode. Several of these modes are illustrated including a null position (FIG. **14**A), medium pressure extension as shown in FIG. **14**B (chamber C_2 connected to return, chamber C_1 connected to P_m), high pressure extension as shown in FIG. **14**C (C_2 connected to return and C_1 connected to P_h), and a coast/braking mode as shown in FIG. **14**D where both $C_{1\ and\ C2}$ are connected to return. Movement of the spool away from null in the opposite direction provides the above three modes in retraction instead of extension. The valve position of FIG. **14**C and its minor image provide two additional modes: retraction regeneration to high pressure and extension regeneration to high pressure respectively. A downside of this example **92** is that it cuts off flow momentarily as the spool goes from one of

the driving modes (i.e. medium or high pressure extension or retraction) to one of the braking modes. For this reason, the valve is best used to drive low-inertia loads at low speeds and/or where the spool can be repositioned very quickly.

[0074] FIGS. **15**A-**15**E depict yet another spool valve concept **94** capable of controlling actuator force and direction using pressure sources P_r, P_m and P_h. This variation is functionally similar to that shown in FIGS. **13**A-**13**E, but is more compact. FIG. **15**A shows concept **94** in the null position with all ports blocked. FIG. **15**B shows medium pressure extension mode, FIG. **15**C shows high pressure extension, FIG. **15**D shows medium pressure retraction, and **15**E shows high pressure retraction. The high pressure modes can also be regenerative given a sufficiently large aiding load. Theoretical power savings, doing positive and negative work against a spring, is 37.5% for this and for the concept of FIGS. **13**A-**13**E. The concept depicted in FIGS. **14**A-**14**D has a higher theoretical savings (50%) because of the coast/brake mode.

[0075] An energy saving is thus effected in a method in accordance with the invention, for example, as shown for actuator **20**, FIG. **2**, by producing high pressure hydraulic fluid, producing medium pressure hydraulic fluid, establishing high pressure criteria for actuator **20**, and establishing medium pressure criteria for actuator **20**. In response to high pressure criteria, actuator **20** is driven using the high pressure fluid. In response to medium pressure criteria, actuator **20** is driven using medium pressure fluid. Low pressure hydraulic fluid (e.g., return fluid) is valved to and from the actuator as appropriate. Numerous modes may be possible depending on the valving subsystem including regeneration of high pressure hydraulic fluid during actuation of actuator **20** in one direction, regeneration of medium pressure hydraulic fluid during actuation of the actuator in that direction, braking of the actuator, medium pressure actuation of the actuator, and high pressure actuation of the actuator. The same is true in respect to the other direction of actuation of actuator **20** (regeneration of high pressure hydraulic fluid, regeneration of medium pressure hydraulic fluid, braking, medium pressure actuation, and high pressure actuation). Actuators exist that rotate in different directions as opposed to extending and retracting. Examples of rotary hydraulic devices include rotary-vane actuators and hydraulic gearmotors. Also, the invention can be applied to single acting actuators.

[0076] Thus, although specific features of the invention are shown in some drawings and not in others, this is for convenience only as each feature may be combined with any or all of the other features in accordance with the invention. The words "including", "comprising", "having", and "with" as used herein are to be interpreted broadly and comprehensively and are not limited to any physical interconnection. Moreover, any embodiments disclosed in the subject application are not to be taken as the only possible embodiments.

[0077] In addition, any amendment presented during the prosecution of the patent application for this patent is not a disclaimer of any claim element presented in the application as filed: those skilled in the art cannot reasonably be expected to draft a claim that would literally encompass all possible equivalents, many equivalents will be unforeseeable at the time of the amendment and are beyond a fair interpretation of what is to be surrendered (if anything), the rationale underlying the amendment may bear no more than a tangential relation to many equivalents, and/or there are many other reasons the applicant can not be expected to describe certain insubstantial substitutes for any claim element amended.

[0078] Other embodiments will occur to those skilled in the art and are within the following claims.

What is claimed is:

1. A hydraulic circuit comprising:
- a high pressure source of high pressure hydraulic fluid;
- a medium pressure source of medium pressure hydraulic fluid;
- a low pressure return for low pressure hydraulic fluid;
- an actuator;
- a valve subsystem between the high pressure source, the medium pressure source, the low pressure return, and the actuator, and controllable to drive the actuator using the high pressure hydraulic fluid or the medium pressure hydraulic fluid and to direct low pressure hydraulic fluid exiting the actuator to the low pressure return; and
- a controller responsive to high pressure criteria and medium pressure criteria associated with the actuator and configured to switch the valve subsystem to present high pressure hydraulic fluid to the actuator in response to high pressure criteria and to present medium pressure hydraulic fluid to the actuator in response to medium pressure criteria.

2. The circuit of claim **1** in which the actuator is a double acting actuator.

3. The circuit of claim **2** in which the valve subsystem includes a pressure control valve configured to select which of the high pressure hydraulic fluid and the medium pressure hydraulic fluid is delivered to the actuator.

4. The circuit of claim **3** in which the valve subsystem further includes a direction control valve configured to select the direction of action of the actuator.

5. The circuit of claim **4** in which the pressure control valve is switchable to direct high or medium pressure hydraulic fluid to the direction control valve.

6. The circuit of claim **4** in which the direction control valve is a four-way direction control valve.

7. The circuit of claim **4** in which the pressure control valve includes means for controlling the flow rate of the hydraulic fluid delivered to the actuator.

8. The circuit of claim **1** in which the valve subsystem is further configured to valve low pressure return hydraulic fluid to the actuator.

9. The circuit of claim **1** in which the valve subsystem is further configured to selectively valve high pressure hydraulic fluid produced by the actuator to the high pressure source.

10. The circuit of claim **1** in which the valve subsystem is further configured to selectively valve medium pressure hydraulic fluid produced by the actuator to the medium pressure hydraulic fluid source.

11. The circuit of claim **10** in which the valve subsystem includes a pressure control valve with a supply side including high pressure hydraulic fluid and medium pressure hydraulic fluid ports and a return side including medium pressure hydraulic fluid and low pressure return hydraulic fluid ports.

12. The circuit of claim **1** in which the valve subsystem is configured to control the flow rate of hydraulic fluid delivered to the actuator.

13. The circuit of claim **1** in which the valve subsystem includes a spool valve configured to both select which of the high pressure hydraulic fluid and the medium pressure hydraulic fluid is delivered to the actuator and to select a direction of action of the actuator.

14. The circuit of claim **1** in which the valve subsystem includes a valve with a spool and ports arranged such that

movement of the spool in one direction progresses from providing medium pressure fluid to the actuator and then providing high pressure fluid to the actuator.

15. The circuit of claim **14** in which the spool valve has a return side and a supply side configured such that movement of the spool in one direction provides progressively decreasing pressure fluid on the return side and then provides progressively increasing pressure fluid on the supply side.

16. The circuit of claim **1** in which the high pressure criteria and medium pressure criteria are a function of the force and/or speed to be produced by the actuator.

17. The circuit of claim **1** in which the actuator is a double acting actuator and the valve subsystem is configured to actuate the actuator in a first direction and a second direction and in four or more modes including regeneration of high pressure hydraulic fluid during actuation of the actuator in the first direction, regeneration of medium pressure hydraulic fluid during actuation in the first direction, braking of the actuator during actuation in the first direction, medium pressure actuation of the actuator in the first direction, high pressure actuation of the actuator in the first direction, regeneration of high pressure hydraulic fluid during actuation of the actuator in the second direction, regeneration of medium pressure hydraulic fluid during actuation of the actuator in the second direction, braking of the actuator during actuation in the second direction, medium pressure actuation of the actuator in the second direction, and/or high pressure actuation of the actuator in the second direction.

18. The circuit of claim **1** in which the valve subsystem is configured to prevent interruption of flow to or from the actuator during switching of the selection of the pressure source communicating with the actuator.

19. A method of actuating an actuator comprising:

producing high pressure hydraulic fluid;

producing medium pressure hydraulic fluid;

valving low pressure hydraulic fluid;

establishing high pressure criteria for the actuator;

establishing medium pressure criteria for the actuator;

in response to high pressure criteria, driving the actuator using high pressure hydraulic fluid; and

in response to medium pressure criteria, driving the actuator using medium pressure fluid.

20. The method claim **19** in which the actuator is a double acting actuator configured to actuate in a first direction and a second direction and the method includes actuating the actuator in four or more modes including regeneration of high pressure hydraulic fluid during actuation of the actuator in the first direction, regeneration of medium pressure hydraulic fluid during actuation in the first direction, braking of the actuator during actuation in the first direction, medium pressure actuation of the actuator. in the first direction, high pressure actuation of the actuator in the first direction, regeneration of high pressure hydraulic fluid during actuation of the actuator in the second direction, regeneration of medium pressure hydraulic fluid during actuation of the actuator, braking of the actuator during actuation in the second direction, medium pressure actuation of the actuator in the second direction, and/or high pressure actuation of the actuator in the second direction.

21. The method of claim **20** in which there are at least six said modes.

22. The method of claim **19** including selecting which of the high pressure hydraulic fluid and the medium pressure hydraulic fluid is delivered to the actuator and selecting the direction of the actuator.

23. The method of claim **19** including controlling the flow rate of the hydraulic fluid delivered to the actuator.

24. The method of claim **19** including valving low pressure hydraulic fluid to the actuator.

25. The method of claim **19** including storing and re-using high pressure hydraulic fluid produced by the actuator.

26. The method of claim **19** including storing and re-using medium pressure hydraulic fluid produced by the actuator.

27. The method of claim **19** in which the actuator includes first and second chambers and the method includes selectively valving high pressure hydraulic fluid to each chamber, medium pressure hydraulic fluid to each chamber, and low pressure hydraulic fluid from each chamber.

28. The method of claim **27** further including selectively valving high pressure hydraulic fluid from each chamber, medium pressure hydraulic fluid from each chamber, and low pressure hydraulic fluid to each chamber.

* * * * *